THE

LONDON EDINBURGH, AND DUBLIN

PHILOSOPHICAL MAGAZINE

AND

JOURNAL OF SCIENCE.

[SEVENTH SERIES.]

AUGUST 1928.

XXII. *General Solution of the Equation* $\nabla^2\psi = \omega$ *in n-dimensional Euclidean Space.* *By* A. J. Carr, *M.A., formerly Lecturer in Mathematics, the Technical College, Bradford* *.

IN a paper, "Note on Green's Lemma and Stokes's Theorem," which appeared in the Phil. Mag. for Sept. 1927, I postulated the existence in Euclidean space of n dimensions of the formula analogous to Green's Lemma for three dimensions in the form

$$\iint\ldots\int \sum_1^n \partial U_s/\partial x_s \,.\, dx_1\, dx_2 \ldots dx_n$$

$$= \iint\ldots\int \sum_1^n (-)^{n-s}\, U_s J_s \,.\, du_1\, du_2 \ldots du_{n-1}, \quad . \quad (1)$$

where

$$J_s = \partial(x_1, \ldots x_{s-1}, x_{s+1}, \ldots x_n)/\partial(u_1, \ldots u_{n-1}).$$

This was arrived at by comparison with the previous results of the same article, and without attempting further to prove it, I set myself the same month that the paper was published the problem of finding a solution of the equation $\nabla^2\psi = \omega$ by its aid.

By pure but happy accident, two days after I had completed my solution to my satisfaction I discovered a handy little book, 'Vector Analysis and Relativity,' by Dr. F. D.

* Communicated by the Author.

Murnaghan (The Johns Hopkins Press, 1922). There I saw a rigorous proof of the foregoing formula, which, as it very fortunately turned out, now stands without need of correction (save that $dx_1\,dx_2 \ldots dx_n$ should be replaced by

$$du_1\,du_2 \ldots du_{n-1}\,du_n\,\partial(x_1 \ldots x_n)/\partial(u_1 \ldots u_{n-1}, u_n),$$

where $u_1, u_2, \ldots u_{n-1}$ are any $n-1$ variables which serve to specify the $(n-1)$-dimensional surface given by u_n=constant, otherwise this paper might have had to be destroyed.

As it is, I have made practically no alteration save that I have fallen into line with Murnaghan by speaking of a coordinate "spread" and using $d\mathrm{V}_{n-1}$ and $d\mathrm{V}_n$ in place of df and dv, as I had previously written them. I had also introduced the idea of direction-cosines and normals, which I find are the same as his direction-coefficients and normals; but as my viewpoint was somewhat different from his, I have not excised this part of my work.

Whereas, however, Murnaghan's small treatise is a fairly complete exposition of n-dimensional tensor analysis, I confined (and do confine) myself exclusively to orthogonal Cartesian coordinates. My U_s is the same as his (X_s) $[\equiv(-)^{n-s}\mathrm{X}_{12,\ldots s-1,s+1,\ldots n}]$, the X's in the second member being (as his notation implies) components of an alternating covariant tensor of rank $n-1$ (p. 38). The advantage (for the purpose for which I shall use it) of the form (1) is that the right-hand member can conveniently be written

$$(-)^{n-1}\int\left|\mathrm{U}_1\frac{\partial x_2}{\partial u_1}\frac{\partial x_3}{\partial u_2}\cdots\frac{\partial x_n}{\partial u_{n-1}}\right|\{du_{n-1}\}, \quad . \quad (2)$$

where, as usual, $|\,a_1b_2 \ldots\,|$ denotes the determinant

$$\begin{vmatrix} a_1b_1 \ldots \\ a_2b_2 \ldots \\ \ldots\ldots\ldots \end{vmatrix}$$

and $\qquad \{k_p\} \equiv k_1k_2 \ldots k_p.$

Putting in (1)

$$\mathrm{U}_s = \phi\,\partial\psi/\partial x_s - \psi\,\partial\phi/\partial x_s, \quad . \quad . \quad . \quad (2\,\mathrm{A})$$

we get

$$\int_{\mathrm{V}_n}[\phi\nabla^2\psi - \psi\nabla^2\phi]\,d\mathrm{V}_n$$
$$= \Sigma\int_{\mathrm{V}_{n-1}}\left(\phi\frac{\partial\psi}{\partial\nu} - \psi\frac{\partial\phi}{\partial\nu}\right)d\mathrm{V}_{n-1}, \quad . \quad (3)$$

where the V_{n-1} are the $(n-1)$-dimensional "spreads" bounding V_n the n-dimensional "region," and

$$\frac{\partial}{\partial\nu}=\Sigma\nu_s\frac{\partial}{\partial x_s}$$

denotes differentiation along the outward "normal" to V_{n-1}. This result is also given by Murnaghan (p. 71), where his dV_{n-1}

$$=\sqrt{gg^{st}J_sJ_t}$$

$$=\sqrt{\Sigma J_s^2}$$

here, since $g=1$, $g^{st}=1$ or zero, according as $t=s$, or $t\neq s$.

I myself derived the latter result in the somewhat more naïve manner which here follows.

Let

$$F(x_1, x_2, .. x_n)=0 \quad . \quad . \quad . \quad . \quad . \quad (4)$$

be the equation to an $(n-1)$-spread, and also, for brevity, let s be a dummy or umbral symbol (*i. e.* if it occurs twice in a term, that term is supposed to be summed for all values of s from 1 to n, thus obviating the necessity of writing Σ each time and at the same time clarifying the analysis) unless otherwise stated.

Then, if the straight line given by

$$x_s=\alpha_s+l_sr \qquad (s=1, 2, \ldots n),$$

and therefore having direction-cosines $(l_1, l_2, \ldots l_n)$, where $l_sl_s=1$, cut (5), we have

$$0=F(\alpha_1, \ldots \alpha_n)+rl_s\frac{\partial F}{\partial\alpha_s}+\tfrac{1}{2}r^2\left(l_s\frac{\partial}{\partial\alpha_s}\right)^2F+\ldots.$$

The line is a "tangent" if

$$F(\alpha_1, \ldots \alpha_n)=0$$

and

$$l_s\frac{\partial F}{\partial\alpha_s}=0, \quad . \quad . \quad . \quad . \quad . \quad . \quad (5)$$

which shows that (α) lies on an $(n-1)$-spread, the tangent-plane-spread to (4). In this lie *all* the straight lines whose $n-1$ equations are

$$\frac{x_1-\alpha_1}{l_1}=\frac{x_2-\alpha_2}{l_2}=\ldots=\frac{x_n-\alpha_n}{l_n}.$$

This gives an $\overline{n-1}$-ply infinite number of straight lines for the $\overline{n-1}$-ply infinite choices of

$$l_1, l_2, \ldots l_{n-1} \quad (l_n=\sqrt{1-l_1^2-\ldots l_{n-1}^2}),$$

all of which, if they satisfy (5), are tangent lines to (5) and therefore also satisfy the equation

$$l_s \nu_s = 0. \quad . \quad . \quad . \quad . \quad . \quad . \quad . \quad . \quad (6)$$

Multiply (5) by λ, subtract (6); then, since all the l's (except l_n, say) are independent, the condition that

$$l_s\left(\lambda \frac{\partial F}{\partial \alpha_s} - \nu_s\right) = 0$$

always, is that

$$\lambda = \frac{\nu_1}{\partial F/\partial \alpha_1} = \frac{\nu_2}{\partial F/\partial \alpha_2} = \ldots = \frac{1}{\sqrt{(\partial F/\partial \alpha_s)(\partial F/\partial \alpha_s)}}.$$

Now *assuming* that, since the normal to dV_{n-1} makes an angle with the x-axis whose cosine is ν_s, the projection on the $(n-1)$-coordinate plane-spread normal to that axis is

$$dV_{n-1,\,s} = \nu_s\, dV_{n-1},$$

we have

$$dV^2_{n-1} = dV_{n-1,\,s}\, dV_{n-1,\,s}\,;$$

where $dV_{n-1,\,s}$ is the counterpart in curvilinear coordinates of the element $dx_1\, dx_2 \ldots dx_{s-1}\, dx_{s+1} \ldots dx_n$ in the original Cartesian system, and is therefore expressed by the usual formula for change of variables, namely

$$dV_{n-1,\,s} = (-)^{n-s} \frac{\partial(x_1, \ldots x_{s-1}, x_{s+1}, \ldots x_n)}{\partial(u_1, \ldots\ldots\ldots\ldots\ldots u_{n-1})} du_1 \ldots du_{n-1}$$

$$= (-)^{n-s} J_s\{du_{n-1}\} \qquad (s \text{ is not umbral}),$$

$$dV^2_{n-1} = J_s J_s\{du_{n-1}\}^2, \quad . \quad . \quad . \quad . \quad . \quad . \quad . \quad . \quad . \quad (7)$$

where the u_{n-1} serve to specify the $(n-1)$-spread. This, as has been before remarked, is also Murnaghan's result.

Thus, let us define a hypersphere whose centre is at the point $(a_1, a_2, \ldots a_n)$ and whose "radius" is R, by the equation

$$F(x_1 \ldots x_n) \equiv (x_s - a_s)(x_s - a_s) - R^2 = 0.$$

$$\therefore \quad \nu_s = (\partial F/\partial x_s / \sqrt{\partial F/\partial x_p \cdot \partial F/\partial x_p})_\alpha$$

$$= (\alpha_s - a_s)/R = \partial R/\partial \alpha_s\,;$$

while the equations of the radius from the centre (a) to (α) give

$$\frac{\alpha_1 - a_1}{l_1} = \frac{\alpha_2 - a_2}{l_2} = \ldots = R.$$

Hence $l_s=\nu_s$, and therefore the radius is normal to the surface of the hypersphere, so that $\partial/\partial\nu$ can be replaced by $\partial/\partial r$. The expression for dV_{n-1} will follow later.

We gather that, just as in three dimensions, we have

$$\int\left(\frac{\partial U}{\partial x_1}\frac{\partial V}{\partial y_2}\frac{\partial W}{\partial z}\right)dv = \Sigma\int(\nu_x U+\nu_y V+\nu_z W)\,df,$$

so here we always get that

$$\int(\partial U_s/\partial x_s)\,dV_n = \Sigma\int(-)^{n-s}U_sJ_s\{du_{n-1}\} = \Sigma\int\nu_s U_s\,dV_{n-1}.$$

Turning now to $\nabla^2\phi=0$, we find that a simple solution is

$$\phi = r_n^{-n+2}\,{}^*, \quad . \quad . \quad . \quad . \quad . \quad . \quad . \quad (8)$$

where, if

$$y_s = x_s - a_s,$$

then

$$r_n^2 = y_s y_s\,;$$

since

$$\frac{\partial}{\partial x_s}\left(\frac{1}{r_n^{n-2}}\right) = -(n-2)\frac{y_s}{r_n^n},$$

$$\frac{\partial^2}{\partial x_s^2}\left(\frac{1}{r_n^{n-2}}\right) = -\frac{n-2}{r_n^n}+n(n-2)\frac{y_s^2}{r_n^{n+2}},$$

and thus

$$\nabla^2(r_n^{-n+2}) = -n(n-2)r_n^{-n}+n(n-2)r_n^{-n-2}y_s y_s$$
$$= 0.$$

Using this in (3), we find

$$\int_{V_n}\frac{\nabla^2\psi}{r_n^{n-2}}dV_n = \Sigma\int_{V_{n-1}}\frac{\partial}{\partial\nu}(r_n^{n-2}\psi)\frac{dV_{n-1}}{r_n^{2n-4}}, \quad . \quad (9)$$

provided A (a) is a fixed point *outside* the region of integration V_n.

If, however, A be *inside* the region, then, since r_n^{-n+2} is now infinite at A, we adopt the usual method of surrounding A by a small hypersphere of radius ρ and centre A. If we use (2), the right-hand member of (9) will be found to reduce to

$$-(-)^{n-1}\int_0^{2\pi}d\theta_n\int_0^{\pi}\cdots\int_0^{\pi}\left[\rho\frac{\partial\psi}{\partial\rho}+(n-2)\psi\right]\frac{\Delta_n}{\rho^n}\{d\theta_{n-2}\}$$
$$. \quad . \quad . \quad (10)$$

* It will now be seen why I deal only in Galilean coordinates for which ν_n behaves as a vector. It does not do so in generalized curvilinear space, nor is r_n^2 invariant. *Cf.* Eddington, 'Mathematical Theory of Relativity,' § 74, p. 179, and § 84, p. 198.

since we have seen that ρ is negatively normal to the surface of the hypersphere. Here

$$y_1 = \rho \cos \theta_1,$$
$$y_s = \rho \sin \theta_1 \sin \theta_2 \ldots \sin \theta_{s-1} \cos \theta_s, \quad (s = 1, 2, \ldots n-1)$$
$$y_n = \rho \sin \theta_1 \sin \theta_2 \ldots \sin \theta_{n-2} \sin \theta_{n-1};$$

and thus

$$y_s y_s = \rho^2.$$

Also

$$\Delta_n \equiv \begin{vmatrix} y_1 & y_2 & \ldots y_n \\ \dfrac{\partial y_1}{\partial \theta_1} & \dfrac{\partial y_2}{\partial \theta_1} & \ldots \dfrac{\partial y_n}{\partial \theta_1} \\ \cdot & \cdot & \cdot \\ \dfrac{\partial y_1}{\partial \theta_{n-1}} & \dfrac{\partial y_2}{\partial \theta_{n-1}} & \ldots \dfrac{\partial y_n}{\partial \theta_{n-1}} \end{vmatrix}.$$

This determinant can be most easily evaluated by induction. For, if we put

$$y_n' \equiv y_n \cos \theta_n, \qquad y_{n+1} \equiv y_n \sin \theta_n,$$

then

$$\Delta_{n+1} \equiv \begin{vmatrix} y_1 & y_2 & \ldots y_n' & y_{n+1} \\ \dfrac{\partial y_1}{\partial \theta_1} & \dfrac{\partial y_2}{\partial \theta_1} & \ldots \dfrac{\partial y_n'}{\partial \theta_1} & \dfrac{\partial y_{n+1}}{\partial \theta_1} \\ \cdot & \cdot & \cdot & \cdot \\ \dfrac{\partial y_1}{\partial \theta_{n-1}} & \dfrac{\partial y_2}{\partial \theta_{n-1}} & \ldots \dfrac{\partial y_n'}{\partial \theta_{n-1}} & \dfrac{\partial y_{n+1}}{\partial \theta_{n-1}} \\ \dfrac{\partial y_1}{\partial \theta_n} & \dfrac{\partial y_2}{\partial \theta_n} & \ldots \dfrac{\partial y_n'}{\partial \theta_n} & \dfrac{\partial y_{n+1}}{\partial \theta_n} \end{vmatrix}$$

$$\equiv \begin{vmatrix} y_1 & \ldots y_{n-1} & y_n \cos \theta_n & y_n \sin \theta_n \\ \dfrac{\partial y_1}{\partial \theta_1} & \ldots \dfrac{\partial y_{n-1}}{\partial \theta_1} & \dfrac{\partial y_n}{\partial \theta_1} \cos \theta_n & \dfrac{\partial y_n}{\partial \theta_1} \sin \theta_n \\ \cdot & \cdot & \cdot & \cdot \\ \dfrac{\partial y_1}{\partial \theta_{n-1}} & \ldots \dfrac{\partial y_{n-1}}{\partial \theta_{n-1}} & \dfrac{\partial y_n}{\partial \theta_{n-1}} \cos \theta_n & \dfrac{\partial y_n}{\partial \theta_{n-1}} \sin \theta_n \\ 0 & \ldots 0 & -y_n \sin \theta_n & y_n \cos \theta_n \end{vmatrix}$$

$$= (-)^{2n-1}(-y_n \sin \theta_n)\Delta_n \sin \theta_n + (-)^{2n} y_n \cos \theta_n \Delta_n \cos$$
$$= y_n \Delta_n = y_n' \sec \theta_n \Delta_n.$$

Thus, if

$$\bar{y}_k = y_k \sec\theta_k = \prod_{p=1}^{k-1} \sin\theta_p,$$

then

$$\Delta_n = \bar{y}_{n-1}\Delta_{n-1}$$
$$= \bar{y}_{n-1}\bar{y}_{n-2}\ldots\bar{y}_2\Delta_2.$$

Now Δ_2 is calculated on the supposition that

$$y_1 = \rho\cos\theta_1, \qquad y_2' = \rho\sin\theta_1.$$

Hence

$$\Delta_2 = \begin{vmatrix} \rho\cos\theta_1 & \rho\sin\theta_1 \\ -\rho\sin\theta_1 & \rho\cos\theta_1 \end{vmatrix}$$
$$= \rho^2.$$

$$\therefore \qquad \Delta_n/\rho^n = \sin^{n-2}\theta_1 \sin^{n-3}\theta_2 \ldots \sin^2\theta_{n-3}\sin\theta_{n-2}.$$

If, in (10), we now put $\rho=0$, then (provided $\partial\psi/\partial\rho$ is finite always), since the hypersphere now becomes a point, the expression (10) reduces to

$$2\pi(-)^n(n-2)\psi_A \int_0^\pi \sin^{n-2}\theta_1\, d\theta_1 \int_0^\pi \sin^{n-3}\theta_2\, d\theta_2 \ldots \int_0^\pi \sin\theta_{n-2}\, d\theta_{n-2}$$

$$= 2\pi(-)^n(n-2)\psi_A \frac{\Gamma\left(\frac{n-1}{2}\right)\Gamma\left(\frac{1}{2}\right)}{\Gamma\left(\frac{n}{2}\right)} \cdot \frac{\Gamma\left(\frac{n-2}{2}\right)\Gamma\left(\frac{1}{2}\right)}{\Gamma\left(\frac{n-1}{2}\right)} \cdots \frac{\Gamma\left(\frac{3}{2}\right)\Gamma\left(\frac{1}{2}\right)}{\Gamma\left(\frac{4}{2}\right)} \cdot \frac{\Gamma\left(\frac{2}{2}\right)\Gamma\left(\frac{1}{2}\right)}{\Gamma\left(\frac{3}{2}\right)}$$

$$= 2\pi(-)^n(n-2)\psi_A[\Gamma(\tfrac{1}{2})]^{n-2}/\Gamma(n/2)$$
$$= K_n\psi_A,$$

where

$$(-)^n K_n = 4\pi^{n/2}/(\tfrac{1}{2}n-2)! \qquad (n \text{ even})$$
$$= (4\pi)^{(n-1)/2}(\tfrac{1}{2}\overline{n-3})!/(n-3)! \quad (n \text{ odd}).$$

Finally, we get for a point *inside* the region that a solution of the equation $\nabla^2\psi=\omega$ is

$$K_n\psi_A = \int_{V_n} \frac{\omega\, dV_n}{r_n^{\,n-2}} - \Sigma\int_{V_{n-1}} \frac{\partial}{\partial\nu}(r_n^{\,n-2}\psi)\frac{dV_{n-1}}{r_n^{\,2n-4}}. \qquad (11)$$

The equation (11) constitutes as complete a solution as we are ever likely to get without specifying further the nature of the $(n-1)$-dimensional spreads. If, for example, ω is different from zero inside a hypersphere of radius R, and we take its "surface" for the outer bounding surface, there being no surfaces enclosed, then

$$dV_n = \frac{\partial(y_1, y_2, \dots y_n)}{\partial(\theta_1, . \theta_{n-1}, r_n)} dr_n\{d\theta_{n-1}\}$$

$$= (-)^{n-1}\frac{\Delta_n}{r_n} dr_n\{d\theta_{n-1}\},$$

and (11) becomes

$$K_n\psi_\Delta = (-)^{n-1}\int_0^{2\pi} d\theta_{n-1} \prod_{s-1}^{n-2} \int_0^{\pi} \sin^{n-s-1}\theta_s\, d\theta_s$$

$$\left[\int_0^{R} \omega r_n\, dr_n - \frac{\partial(R^{n-2}\psi)/\partial R}{R^{n-3}}\right] \quad (12)$$

from (10).

Incidentally, this shows us that the element of surface of a hypersphere of radius R is, comparing equations (11) and (12), given by

$$dV_{n-1} = (-)^{n-1}(\Delta_n/R)\{d\theta_{n-1}\}. \quad . \quad . \quad . \quad (13)$$

This result can also be proved directly by using (7). For here J_s, if written down, will be found to reduce to

$$\frac{\partial y_1}{\partial\theta_1} \cdot \frac{\partial y_2}{\partial\theta_2} \cdots \frac{\partial y_{s-1}}{\partial\theta_{s-1}} \cdot \left| \frac{\partial y_{s+1}}{\partial\theta_s} \cdot \frac{\partial y_{s+2}}{\partial\theta_{s+1}} \cdots \frac{\partial y_n}{\partial\theta_{n-1}} \right|,$$

and by precisely the same method as that employed for Δ_n, the last determinant is

$$\bar{y}_{n-1}\bar{y}_{n-2} \dots \bar{y}_{s+2} \cdot {}_s\Delta_{s+2},$$

where in ${}_s\Delta_{s+2}$ we have

$$y_{s+1} = R \sin\theta_1 \sin\theta_2 \dots \sin\theta_s \cos\theta_{s+1},$$

$$y'_{s+2} = R \sin\theta_1 \sin\theta_2 \dots \sin\theta_s \sin\theta_{s+2},$$

and therefore

$${}_s\Delta_{s+2} = \frac{\partial(y_{s+1} \cdot y'_{s+2})}{\partial(\theta_s, \theta_{s+1})}$$

$$= y_s\bar{y}_{s+1}.$$

Finally, since

$$\frac{\partial y_k}{\partial \theta_k} = -\bar{y}_{k+1},$$

we have

$$\begin{aligned} J_s &= (-)^{s-1}\bar{y}_2\bar{y}_3 \dots \bar{y}_s y_s \bar{y}_{s+1}\bar{y}_{s+2} \dots \bar{y}_{n-1} \\ &= (-)^{s-1} y_s \,.\, \Delta_n/R^2. \end{aligned}$$

Thus

$$\begin{aligned} dV_{n-1}{}^2 &= J_s J_s \{dV_{n-1}\}^2 \\ &= (\Delta_n{}^2/R^2)\{d\theta_{n-1}\}^2, \quad . \quad . \quad . \quad (14) \end{aligned}$$

from which follows (13).

Also from this we see that

$$\begin{aligned} \nu_s &= (-)^{n-s} J_s \{d\theta_{n-1}\}/dV_{n-1} \\ &= y_s/R, \quad . \quad . \quad . \quad . \quad . \quad . \quad . \quad . \quad . \quad (15) \end{aligned}$$

just as before.

Or we can argue thus. We have always (comparing (2) and (7))

$$\nu_s U_s \, dV_{n-1} = (-)^{n-1} \left| U_1 \frac{\partial y_2}{\partial u_1} \cdot \frac{\partial y_3}{\partial u_2} \cdots \frac{\partial y_n}{\partial u_{n-1}} \right| \{du_{n-1}\}.$$

Of course this equation does not enable us generally to determine dV_{n-1}, which is independent of the U_s. But if the surface be that of a hypersphere, then using (15), we get, putting

$$U_s = \partial R/\partial x_s = y_s/R,$$

$$\frac{y_s}{R} \cdot \frac{y_s}{R} dV_{n-1} = (-)^{n-1} \left| \frac{y_1}{R} \cdot \frac{\partial y_2}{\partial \theta_1} \cdots \frac{\partial y_n}{\partial \theta_{n-1}} \right| \{d\theta_{n-1}\},$$

i. e. $$dV_{n-1} = (-)^{n-1} \Delta_n \{d\theta_{n-1}\}/R.$$

We also see that for the hypersphere

$$dV_n = \frac{\partial(y_1, y_2, \dots y_n)}{\partial(\theta_1, \dots \theta_{n-1}, R)} dR\{d\theta_{n-1}\},$$

and since $\partial y_s/\partial R = y_s/R$, this gives

$$\begin{aligned} dV_n &= (-)^{n-1} \frac{\Delta_n}{R} dR\{d\theta_{n-1}\} \\ &= dR \, dV_{n-1}, \end{aligned}$$

analogously to three dimensions.

Finally, if

$$\psi = O(\mathrm{R}^{-m}) \qquad (m > 1)$$

as

$$\mathrm{R} \to \infty,$$

then

$$\lim_{n=\infty} \frac{1}{\mathrm{R}^{n-3}} \cdot \frac{\partial}{\partial \mathrm{R}} (\mathrm{R}^{n-2}\psi) = 0.$$

If such be the case, we write

$$\mathrm{K}_n \psi_{\mathrm{A}} = \int_{\mathrm{V}_n} \frac{\omega \, d\mathrm{V}_n}{r_n^{\,n-2}},$$

where the region now extends to infinity.

It would be both interesting and perhaps startling to discover that in the four dimensions, x, y, z, ict, this solution could replace Kirchhoff's solution of

$$\Box \psi = \omega.$$

Yet this actually appears to be the case, as the following analysis will serve to show.

Firstly, we observe that here

$$\begin{aligned} r_4^{\,-n+2} &= r_4^{\,-2} \\ &= \frac{1}{2r}\left\{\frac{1}{r-ct_1} + \frac{1}{r+ct_1}\right\}, \quad . \quad . \quad . \quad . \quad (17) \end{aligned}$$

where

$$r^2 = (x-x_0)^2 + (y-y_0)^2 + (z-z_0)^2,$$

$$t_1 = t - t_0,$$

is of the form

$$\phi = \frac{1}{r}\{f(r-ct_1) + f(r+ct_1)\},$$

and is therefore a well-known simple solution of the wave-equation.

Secondly, in (1), put

$$x_1 = x, \quad x_2 = y, \quad x_3 = z, \quad x_4 = ict_1, \quad u_3 = ict_1.$$

Then

$$\begin{aligned} \int \frac{\omega \, d\mathrm{V}_4}{r_4^{\,2}} &= \int \frac{\omega}{r_4^{\,2}} \frac{\partial(x_1, x_2, x_3, x_4)}{\partial(u_1, u_2, u_3, u_4)} du_1 \, du_2 \, du_3 \, d_4,^* \\ &= -ic \int_{-\infty}^{\infty} \left\{ \int \omega \, dv \right\} \frac{dt}{r_4^{\,2}}, \end{aligned}$$

* As we are going to integrate with respect to u_4 first, it seems necessary to put this last in the Jacobian in order to ensure the correct equation for Stokes's Generalized Lemma. *Vide* Murnaghan, *loc. cit.* p. 33.

where

$$dv = \frac{\partial(x, y, z)}{\partial(u_1, u_2, u_4)} du_1 du_2 du_4$$

and

$$u_4 = \text{constant}$$

is the equation to the two-dimensional bounding surfaces S of the now three-dimensional solid region.

Also

$$J_1 = \frac{\partial(y, z, ict_1)}{\partial(u_1, u_2, ict_1)} = \frac{\partial(y, z)}{\partial(u_1, u_2)},$$

$$J_2 = \frac{\partial(x, z, ict_1)}{\partial(u_1, u_2, ict_1)} = -\frac{\partial(z, x)}{\partial(u_1, u_2)},$$

$$J_3 = \frac{\partial(x, y, ict_1)}{\partial(u_1, u_2, ict_1)} = \frac{\partial(x, y)}{\partial(u_1, u_2)},$$

$$J_4 = \frac{\partial(x, y, z)}{\partial(u_1, u_2, ict_1)} = \frac{1}{ic} \Sigma \dot{x} \frac{\partial(y, z)}{\partial(u_1, u_2)},$$

where

$$\dot{x} = dx/dt_1 \text{ etc.}$$

For internal points (1), (2 A), and (11) now give us

$$K_4\psi_A + \int (-)^{4-s} J_s \left(\phi \frac{\partial\psi}{\partial x_s} - \psi \frac{\partial\phi}{\partial x_s}\right) du_1 du_2 du_3$$

$$= \int \frac{\partial}{\partial x_s}\left(\phi \frac{\partial\psi}{\partial x_s} - \psi \frac{\partial\phi}{\partial x_s}\right) \frac{\partial(x_1, x_2, x_3, x_4)}{\partial(u_1, u_2, u_3, u_4)} du_1 du_2 du_3 du_4,$$

$$K_4\psi_A = -ic \int \left\{ \int \omega\, dv \right\} \frac{dt_1}{r_4^2} - S,$$

$$S = ic \Sigma \int dt_1 \int \Sigma \left[\left(\psi \frac{\partial\phi}{\partial x} - \phi \frac{\partial\psi}{\partial x}\right) - \frac{\dot{x}}{c^2}\left(\phi \frac{\partial\psi}{\partial t_1} - \psi \frac{\partial\phi}{\partial t_1}\right)\right] \frac{\partial(y, z)}{\partial(u_1, u_2)} dS$$

$$= ic \Sigma \iint \left[\left(\psi \frac{\partial\phi}{\partial \nu} - \phi \frac{\partial\psi}{\partial \nu}\right) - \frac{\nu}{c^2}\left(\phi \frac{\partial\psi}{\partial t_1} - \psi \frac{\partial\phi}{\partial t_1}\right)\right] dS\, dt_1,$$

$$K_4 = (-)^4 4\pi^{4/2}/(4/2-2)! = 4\pi^2.$$

Here $\dot{v}$ is the resolved part of $(\dot{x}^2+\dot{y}^2+\dot{z}^2)^{1/2}$ along the two-dimensional spreads or surfaces in the three-dimensional region.

Also

$$\phi=-\frac{1}{2rc}\left\{\frac{1}{(t_1-r/c)}-\frac{1}{(t_1+r/c)}\right\},$$

$$\frac{\partial\phi}{\partial t_1}=\frac{1}{2rc}\left\{\frac{1}{(t_1-r/c)^2}-\frac{1}{(t_1+r/c)^2}\right\}.$$

So, writing

$$\phi=\frac{1}{2ct_1}\left\{\frac{1}{r-ct_1}-\frac{1}{r+ct_1}\right\},$$

we get

$$\frac{\partial\phi}{\partial t_1}=-\frac{c^2t_1}{r}\cdot\frac{\partial\phi}{\partial r}.$$

Hence we can integrate with respect to t_1 from $-\infty$ to $+\infty$ by the theory of residues *. Thus

$$ic\int_{-\infty}^{+\infty} f_1(t_1)\,\phi\,dt_1$$

$$=\frac{\pi}{2r}\left\{f_1\left(\frac{r}{c}\right)-f_1\left(-\frac{r}{c}\right)\right\}-2\pi c\,\Sigma R_1, \quad . \quad . \quad . \quad . \quad (19)$$

$$ic\int_{-\infty}^{+\infty} f_2(t_1)\frac{\partial\phi}{\partial t_1}\,dt_1$$

$$=-\frac{\pi}{2r}([f_2'(t_1)]_{r/c}-[f_2'(t_1)]_{-r/c})-2\pi c\,\Sigma R_2,$$

$$ic\int_{-\infty}^{+\infty} f_3(t_1)\frac{\partial\phi}{\partial r}\,dt_1$$

$$=\frac{\pi}{2c^2}\left\{\left[\frac{\partial}{\partial t_1}\left(\frac{f_3(t_1)}{t_1}\right)\right]_{r/c}-\left[\frac{\partial}{\partial t_1}\left(\frac{f_3(t_1)}{t_1}\right)\right]_{-r/c}\right\}-2\pi c\,\Sigma R_3,$$

where ΣR_1 is the sum of the residues of $f_1(t_1)\phi$ at the various poles of $f_1(t_1)$ above the real axis; ΣR_2 of $f_2(t_1)\,\partial\phi/\partial t_1$ at those of $f_2(t_1)$, and ΣR_3 of $f_3(t_1)\,\partial\phi/\partial r$ at those of $f_3(t_1)$.

By means of these formulæ equation (18) becomes, after some reduction,

* Whittaker & Watson, 'Modern Analysis,' § 6·23, or MacRobert, 'Functions of a Complex Variable,' p. 65.

$$8\pi\psi_A = -\int \frac{[\omega]_1^2}{r}\,dv + S_1 + 4c\int \frac{\Sigma R}{r}\,dv + 4c\int \Sigma R_0\,dS,$$

$$S_1 = \int \left\{ \left[\frac{1}{cr}\frac{\partial r}{\partial \nu}\frac{\partial \psi}{\partial t_1} - \psi\frac{\partial}{\partial \nu}\left(\frac{1}{r}\right) + \frac{1}{r}\frac{\partial \psi}{\partial \nu}\right]_1^2 \right.$$

$$\left. + \frac{1}{c^2}\left[2\dot{\nu}\frac{\partial \psi}{\partial t_1} + \psi\ddot{\nu}\right]_1^2 - \frac{2}{cr}\frac{\partial r}{\partial \nu}\left[\frac{\partial \psi}{\partial t_1}\right]_2 \right\} dS, \quad (20)$$

where

$$[F(t_1)]_1^2 = F(r/c) - F(-r/c),$$

and therefore

$$[F_1(t)]_1^2 = F_1(t_0 + r/c) - F_1(t_0 - r/c).$$

Also ΣR, ΣR_0 denote the sums of the residues of ω and the integrand of S respectively, *qua* functions of t_1 at their poles in t_1, which are of the form $a+bi$, where b is positive.

I have written the first three terms in the surface integral so as to make it resemble Kirchhoff's integral. It will be noticed that, neglecting the first substitution of r/c for t_1 in S_1 and also in the volume integral, and omitting the last three terms of S_1 and the residue terms in the previous equation, we get precisely minus one-half of Kirchhoff's solution.

The reason for this apparent discrepancy is that in place of Kirchhoff's function

$$\frac{1}{r}F\left(t_1 + \frac{r}{c}\right),$$

I have written

$$-\frac{1}{2rc}f\left(t_1 + \frac{r}{c}\right),$$

where

$$f(x) = 1/x.$$

His $F(x)$ possesses the rather artificial property of being, together with all its derivatives, zero, except when $x=0$, and of giving

$$\int_{-\infty}^{+\infty} F(x)\,dx = 1.$$

My $f(x)$ arises more naturally, and although it has not the first property, which here is not necessary, it does give

$$\frac{1}{\pi i}\int_{-\infty}^{+\infty} f(x)\,dx = 1,$$

which is all that is required; for then

$$\frac{1}{\pi i}\int_{-\infty}^{+\infty} \xi(x)\, f(x)\, dx = \xi(0) + 2\Sigma \mathrm{R},$$

as per formula (19). The residues of $f(z)$ above the real axis must necessarily appear, as otherwise the function would be a constant, by Liouville's Theorem, and in this case the substitutions indicated by $[\ ]_1{}^2$ would render (20), and generally ψ_A, zero, and this is not a solution of the general equation with ω different from zero.

Equation (20) clearly represents two equal and opposite wave-trains. Moreover, it includes terms which indicate a normal velocity and acceleration. If we take $\dot{\nu}=c$, $\ddot{\nu}=0$, these disappear, but there is nothing that demands that $\dot{\nu}$ *is* the wave-velocity, so it seems advisable to retain these terms.

Of course I do not pretend for a moment that Kirchhoff's classic solution no longer holds. It obviously must from the method of its derivation. My solution above must therefore be regarded presumably as an extension of his, or else an alternative one.

Appendix.

It was omitted to state that, if $\nabla^2\psi$ is finite at A,

$$\int \frac{\nabla^2\psi}{r_n{}^{n-2}}\, d\mathrm{V}_n$$

is zero when taken over the small hypersphere of radius ρ. For, clearly then, writing $d\omega'$ for the surface-element with $\rho=1$, we have seen that

$$d\mathrm{V}_n = r_n{}^{n-1}\, d\omega'\, dr_n.$$

Hence, if $\nabla^2\psi \leq k$, a finite quantity, at all points in the neighbourhood of A,

$$\int_0^\rho \frac{\Delta^2\psi}{r_n{}^{n-2}}\, r_n{}^{n-1}\, d\omega'\, dr_n \leq k\omega' \int_0^\rho r_n\, dr_n$$
$$= k\omega' \tfrac{1}{2}\rho^2 \to 0.$$

Again, if

$$\lim_{r_n\to\infty} \omega r_n{}^p \leq \mathrm{C}, \qquad (p>2)$$

then, R_1 being any finite quantity,

$$\int_{r_n=0}^{r_n=\mathrm{R}} \frac{\omega}{r_n{}^{n-2}}\, d\mathrm{V}_n \leq \int_{r_n=0}^{r_n=\mathrm{R}_1} \frac{\omega}{r_n{}^{n-2}}\, d\mathrm{V}_n + |\mathrm{K}_n\mathrm{C}| \int_{\mathrm{R}_1}^{\mathrm{R}} \frac{1}{r_n{}^p}\, r_n\, dr_n,$$

and the latter integral is

$$=\frac{|K_nC|}{p-2}\left\{\frac{1}{R_1^{p-2}}-\frac{1}{R^{p-2}}\right\}$$

$$\rightarrow\frac{|K_nC|}{p-2}\cdot\frac{1}{R_1^{p-2}}$$

as $R\rightarrow\infty$. Also this is a finite quantity; so that under these conditions

$$\int\frac{\omega}{r_n^{n-2}}\,dV_n,$$

taken over the whole of space, is a convergent integral, no assumption being made as to the *continuity* of ω.

Lastly, it is evident that the results throughout the whole paper entail that $n\geq 3$. For $n=2$, we proceed slightly differently, for then

$$J_1=\frac{\partial y}{\partial u_1},\qquad J_2=\frac{\partial x}{\partial u_1},$$

and formula (1) therefore becomes

$$\iint\left(\frac{\partial U_1}{\partial x}+\frac{\partial U_2}{\partial y}\right)\frac{\partial(x,y)}{\partial(u_1u_2)}\,du_1du_2=$$

$$=\int\{(-)^{2-1}U_1J_1+(-)^{2-2}U_2J_2\}\,du_1$$

$$=\int\left(U_2\frac{\partial x}{\partial u_1}-U_1\frac{\partial y}{\partial u_2}\right)du_1. \quad . \quad . \quad . \quad (21)$$

In the event of confusion arising as to which sign to take in replacing $dx\,dy$ by $\pm\,\partial(x,y)/\partial(u_1u_2)\,du_1du_2$, we will consider a typical example of finding the area of the circle $r=a$.

Here, put

$$U_1=0,\quad U_2=y,\quad u_1=\theta,\quad u_2=r.$$

Then (21) becomes

$$\int_0^a dr\left[\int_0^{2\pi}\frac{\partial(x,y)}{\partial(\theta,r)}\,d\theta\right]=\int_0^{2\pi}\frac{\partial y}{\partial\theta}\,d\theta,$$

or

$$\int_0^{2\pi}(-\tfrac{1}{2}a^2)\,d\theta=-\int_0^{2\pi}a^2\sin^2\theta\,d\theta,$$

which is seen to be true. Here, then, we replace the element of area by $-\partial(x,y)/\partial(\theta,r)$. This corresponds

with the previous expression for the dV_n of a hypersphere. Hence we see that the negative sign must be taken, rendering (21) as

$$\iint\left(\frac{\partial U_1}{\partial x}+\frac{\partial U_2}{\partial y}\right)dx\,dy=\int(U_1\,dy-U_2\,dx),$$

the usual Green's Theorem for two dimensions.

For the solution of

$$\frac{\partial^2\phi}{\partial x^2}+\frac{\partial^2\phi}{\partial y^2}=0$$

we can take

$$\phi=\lim_{n=2}\frac{r_n^{-n+2}-a^{-n+2}}{n-2}\quad\ldots\ldots\quad(22)$$

$$=-\log_e(r_2/a).$$

Hence (3) becomes, putting $a=1$,

$$\iint\omega\log_e r\,dx\,dy=\Sigma\int(\log_e r\,.\,\partial\psi/\partial\nu-\psi/r\,.\,\partial r/\partial\nu)\,ds$$

for external points, and for internal points we take the small circle of radius ρ, where

$$ds=\rho\,d\theta,\qquad d\nu=-dr.$$

Since

$$\lim_{r=0}r\log_e r=0,$$

the left-hand member is zero at A, while the right-hand member now reduces to

$$\psi_A\int_0^{2\pi}d\theta=2\pi\psi_A.$$

This is really no new result, for, referring back to where K_n was first derived, we find that, on dividing ϕ by $n-2$ (which we have done here, (22)), we get

$$K_n'=2\pi(-)^n[\Gamma(\tfrac{1}{2})]^{n-2}/\Gamma(n/2),$$

and putting $n=2$, we have at once

$$K_2'=2\pi.$$

Hence,

$$2\pi\psi_A=\int_\Omega\omega\log_e r\,dx\,dy$$
$$+\Sigma\int_C(\psi/r\,.\,\partial r/\partial\nu-\log_e r\,.\,\partial\psi/\partial\nu)\,ds,$$

which is the analogue of (11).

We get Cauchy's Theorem if ω is zero, for this implies the existence of a function ϕ conjugate to ψ and satisfying the same differential equation.

Thus if

$$\psi_A+i\phi_A=f(a)=\frac{1}{2\pi i}\int_C\frac{f(z)}{z-a}\,dz$$

$$=\frac{1}{2\pi i}\int_C\frac{(\psi+i\phi)e^{i\zeta}}{|z-a|e^{i\theta}}\,ds$$

$$=\frac{1}{2\pi i}\int_\sigma\frac{\psi+i\phi}{r}\,e^{i(\zeta-\theta)}ds,$$

then

$$\psi_A=\int_C\psi/r\,.\sin(\bar{\zeta}-\theta)ds+\int_C\phi/r\,.\cos(\bar{\zeta}-\theta)ds.$$

But

$$\begin{aligned}\partial r/\partial\nu&=\partial r/\partial x\,.\,\partial x/\partial\nu+\partial r/\partial y\,.\,\partial y/\partial\nu\\&=(x-a)/r\,.\,\partial y/\partial s-(y-b)/r\,.\,\partial x/ds\\&=\cos\theta\sin\zeta-\sin\theta\cos\zeta=\sin(\zeta-\theta).\end{aligned}$$

So the first term is

$$\int_C\psi/r\,.\,\partial r/\partial\nu\,.\,ds.$$

For the second term we notice that

$$\begin{aligned}0&=[\log(r\phi)]_{s_0}^{s_0}=\int_C\partial(\log(r\phi)/\partial s\,.\,ds\\&=\int_C\phi[\sin\zeta\partial(\log r)/\partial y+\cos\zeta\partial(\log r)/\partial x]ds\\&\quad+\int_C\log r[\sin\zeta\partial\phi/\partial y+\cos\zeta\partial\phi/\partial x]ds\\&=\int_C\phi[\sin\zeta(y-b)/r^2+\cos\zeta(x-a)/r^2]\\&\quad+\int_C\log r[\partial x/\partial\nu\,.\,\partial\psi/\partial x+(-\partial y/\partial\nu)(-\partial\psi/\partial y)]\,ds.\end{aligned}$$

Hence $\int_C\phi/r\,.\cos(\zeta-\theta)ds=-\int_C\log r\,.\,\partial\psi/\partial\nu\,.\,ds.$

So $\quad 2\pi\psi_A=\int_C(\psi/r\,.\,\partial r/\partial\nu-\log_e r\,.\,\partial\psi/\partial\nu)ds.$

This result is only to be expected since Riemann's proof of Cauchy's Theorem uses Green's Theorem in two dimensions *.

* MacRobert, *loc. cit.* § 27.

XXIII. *The Influence of the Solvent on the Mobility of Electrolytic Ions.* By R. T. Lattey *.

THE theorem that Stokes's law can be applied to the motion of an ion in a liquid electrolyte has been upheld by many authors, and notably by Walden and his colleagues †. It may be represented by the equation

$$6\pi\sigma l\eta = Fe, \quad . \quad . \quad . \quad . \quad . \quad . \quad . \quad \text{(i.)}$$

where l = mobility, σ = ionic radius, η = viscosity of solvent, F = Faraday charge, and e = ionic charge. Milner [24] and Debye and Hückel [4] have shown that l must be corrected for the mutual action between ions of opposite sign, and that we must therefore deal with extremely dilute solutions if we wish to deduce the influence of the solvent on mobility. In what follows, only values obtained by extrapolation to infinite dilution are considered.

The evidence adduced in favour of the application of Stokes's law is of various kinds, but the two main propositions put forward in its favour are :—

1. For certain salts $\lambda_0\eta$ is approximately independent of the solvent.
2. For a somewhat larger class of salts $\lambda_0\eta$, though different in different solvents, is approximately independent of temperature in a given solvent.

When, however, we review the data, it becomes clear that in the majority of cases $\lambda_0\eta$ only approximates to constancy in solvents whose dielectric constant is low; directly we come to solvents like water, for which the dielectric constant is high, then larger values of $\lambda_0\eta$ are found. It is thus suggested that $\lambda_0\eta$ is a function of the dielectric constant.

Now, Born [3] and Schmick [32] have attempted to evaluate the forces acting on an ion when moving under the influence of an electric field in an assembly of dipolar molecules. The main difficulty which they encountered in their analyses of the problem arose from the uncertainty of the value to be assigned to the dielectric constant of the medium separating the ion from dipoles at various distances from it; and it is for

* Communicated by the Author.

† The data are assembled and discussed in Walden, 'Leitvermögen der Lösungen,' and in Ulich, 'Ueber die Beweglichkeit der elektrolytischen Ionen.' (Borntraeger, 1926.)

this reason that their results can only be regarded as approximations. Schmick's formula enables us to make estimates of the effective radii of electrolytic ions, but it does not offer a means of deducing the behaviour of a given ion in a given solvent from its behaviour in other solvents. In the present state of our knowledge of the liquid state, it seems, therefore, that a semi-empirical line of attack is the only one open to us.

It may be taken as a general rule that those solvents which yield electrolytic solutions consist of molecules which behave as dipoles in the gaseous state. If this is so, we should expect, as indeed we find to be the case, that in the liquid state these molecules would tend to form aggregates having comparatively small external fields; that is, the liquid would exhibit the properties characteristic of molecular association. As, moreover, thermal agitation would tend to break up these aggregates, the liquid should exhibit decreased association with rise of temperature, and the temperature coefficient of its dielectric constant should have a markedly higher value than that of a liquid whose molecules are not dipoles.

An ion placed in such a liquid would tend to orientate the solvent molecules round it, but this orientation would be destroyed by thermal agitation, and we have to consider the average condition of an ion as a case of equilibrium between electrostatic attraction and thermal agitation; its mobility will therefore be a function of its charge (νe) and the thermal energy of a molecule at the temperature of the experiment ($3k\theta/2$). But it will also depend on the dipolar moment of the solvent molecules, and we have no means of estimating this directly; it is, however, clear that the dielectric constant (D) of the solvent is a function of the moment of its molecules, and we may thus use this to represent the required factor.

Another factor which will influence the result is the size of the solvent molecules, and this, again, is unknown, for, even where information is available as to the size of molecules in the gaseous state, this does not enable us to state their average size when the liquid exhibits association. The kinetic theory, however, indicates that the viscosity of a liquid is a function of the dimensions of its molecules, and we can therefore assume that the mobility of an ion will be a function of the viscosity of the solvent (η). It must also depend on the dimensions of the ion, and we will therefore introduce a quantity σ which has the dimension of length

and is characteristic of the ion. We thus arrive at the conclusion that

$$l/\mathrm{F}e = f(ve, k\theta, \mathrm{D}, \eta, \sigma) \quad . \quad . \quad . \quad . \quad \text{(ii.)}$$

Application of the method of dimensions shows that the required function must have the form

$$\frac{l}{\mathrm{F}e} = \frac{1}{\eta\sigma}\phi\left(\frac{3k\theta\mathrm{D}\sigma}{2e^2}\right), \quad . \quad . \quad . \quad \text{(iii.)}$$

where ϕ indicates an unspecified function. Now, the fact that (*a*) certain ions, such as the tetraethylammonium ion, give values for $l\eta$ which are practically independent of D or θ, and that (*b*) the values of $l\eta$ for any ion tend towards constancy when D is small, suggest that $\phi(3k\theta\mathrm{D}\sigma/2e^2)$ may have the form $\mathrm{A}+\mathrm{B}(3k\theta\mathrm{D}\sigma/2e^2)^n$, where A and B are constants. An examination of the data showed that $l\eta$ could be expressed with remarkable accuracy by the equation

$$l\eta = \alpha+\beta(\theta\mathrm{D})^2, \quad . \quad . \quad . \quad . \quad . \quad \text{(iv.)}$$

where α and β are constants characteristic of the ion. Data for conductivities are more abundant than those for mobilities, and since $\lambda_0 = l + l'$, where l and l' are the mobilities of anion and kation respectively, it is easiest to test the equation in the first place in the form

$$\lambda_0\eta = (\alpha+\alpha')+(\beta+\beta')(\theta\mathrm{D})^2. \quad . \quad . \quad \text{(iv}\,a.)$$

The values of α and β used in what follows have been deduced from the data of Kohlrausch [21] and his collaborators for aqueous solutions at 18° C., and from the results of Sir H. B. Hartley [14], [15] and his colleagues for solutions in methyl alcohol at 25° C. In a comparatively small number of cases one or other of these failed to give the required information, *e.g.* no sulphate is soluble in methyl alcohol. In such cases α and β have been so chosen as to give the best agreement with all the reliable data available.

Table I. gives values for various salts in water at temperatures between 0° C. and 156° C., and also in methyl and ethyl alcohols. In many cases the conductivity has only been determined at a few concentrations, and extrapolation to zero concentration is therefore somewhat uncertain.

Similar remarks apply to the values for sodium iodide given in Table II.; here also it must be noted that some of the solvents, *e.g.* pyridine, are extremely hygroscopic, and that it is well known that small traces of water tend to raise

Table I.

		KCl.		NaCl.		NH_4Cl.		$AgNO_3$.		$Ba(NO_3)_2$.		K_2SO_4.		$MgSO_4$.	
		Calc.	Expt.	Calc.	Expt.	Calc.	Expt.	Calc.	Expt.	Calc.	Expt.	Calc.	Expt.	Calc.	Expt.
Water	0°	79·70	82·02 (37), (40), (41)	66·76	68·75 (14), (16), (37), (42)	79·79	80·0 (1)	70·63	73·2 (5)	71·35	71·2 (41)	80·20	80·5 (20)	68·23	70·7 (41)
	7·1°	98·55	99·11 (18)	82·63	—	98·72	—	87·53	—	88·53	—	98·82	—	85·22	—
	10°	106·63	107·03 (28)	89·45	—	106·84	—	94·79	—	95·91	—	108·28	—	92·57	
	18°	130·00	130·01 (21)	109·18	108·91 (21)	130·34	130·12 (21)	115·85	115·88 (21)	117·31	117·16 (21)	132·95	132·52 (21)	114·08	114·58 (21)
	25°	152·63	151·38 (22), (26)	127·36	127·59 (22)	152·10	—	131·44	134·12 (25)	137·26	134·6 (21)	156·08	153·85 (21)	134·36	—
	35°	183·73	182·39 (18)	154·69	155·75 (18), (19)	184·46	—	164·59	—	166·99	—	109·75	—	164·95	—
	50°	233·8	231·05 (26)	197·31	199·0 (17)	235·05	—	210·5	196·9 (26)	213·9	214 (26)	246·1	—	214·25	—
	75°	322·45	316·5 (26)	273·12	—	324·8	—	292·5	—	298·05	—	346·85	—	305·25	—
	100°	414·9	414 (26), (37)	352·7	358·5 (26)	418·8	415 (26)	379·25	365 (26)	387·4	385 (26)	455·5	455 (26)	404·7	426 (26)
	128°	519·4	519 (26)	443·2	—	525·3	—	478·45	—	489·95	—	582·4	—	522·5	—
	140°	561·5	572 (26)	479·85	512 (26)	568·35	—	518·8	—	531·8	—	634·9	—	571·8	—
	156°	612·34	625 (26)	524·35	555 (26)	624·5	628 (26)	568·15	570 (26)	583·25	600 (26)	700·2	715 (26)	633·7	690 (26)
Methyl alcohol	18°	95·02	92 (6)	87·56	—	101·33	—	101·85	98 (6)						
	25°	105·01	105·05 (14)	96·89	96·95 (14)	110·97	111·00 (14)	112·88	112·95 (14)						
Ethyl alcohol	18°	42·58	43·6 (34)	39·80	38·06 (35)	45·33	35·0 (12)	46·90	37·3 (9)						
	25°	48·29	—	45·19	45·9 (11)	51·45	47·7 (11)	53·30	45 (35)						

TABLE II.

Sodium Iodide.

$\alpha + \alpha' = 0{\cdot}4783$; $\beta + \beta' = 1{\cdot}2468 \,.\, 10^{-9}$.

	°	λ_0 calc.	λ_0 expt.	$\lambda_0\eta$.
Water	0	66·99	65·15 (36)	1·168
	18	109·59	109·59 (21)	1·1575
	25	128·44	128·31 (27), (30), (33)	1·146
Acetonitrile	25	177·4	173 (35)	0·6138
Methyl alcohol	25	106·67	106·7 (14)	0·5814
Ethyl alcohol	0	31·40	30·5 (7)	0·5405
	25	50·35	48·2 (7)	0·5239
	50	76·14	76 (7)	0·5328
Benzonitrile	25	44·2	51·6 (8)	0·6450
Propyl alcohol	0	14·02	13·5 (7)	0·5157
	30	30·21	28·2 (7)	0·4935
	60	57·48	54·2 (7)	0·4905
Acetone	0	134·3	139 (38)	0·5477
			131·4 (23)	
	25	166·8	184·6 (38)	0·5829
			176·2 (23)	
	50	204·2	227·5 (38)	0·5825
Methyl-ethyl-ketone	25	127·9	139 (8)	0·5587
Methyl-phenyl-ketone	25	28·05	35·6 (7)	0·6409
Pyridine	0	36·34	46·8 (7)	0·6367
	25	56·66	68·4 (7)	0·5974
	40	68·37	88·0 (7)	0·6372
	80	107·2	136 (7)	0·6283

the conductivity of solutions in some solvents. (Hartley, Applebey, and Garrod Thomas[13] found that 0·1 per cent. of water increased the conductivity of a solution of lithium nitrate in pyridine by 33 per cent.) It is not therefore surprising that the experimental values given in such

solvents are higher than those given by the formula. In this table are given the experimental values of $\lambda_0\eta$ in order to emphasize the statement that $\lambda_0\eta$ is not constant for such a salt as sodium iodide.

TABLE III.

Tetra-ethyl-ammonium Iodide.

$$\alpha+\alpha' = 0{\cdot}5624\,;\ \beta+\beta' = 0{\cdot}7920{\cdot}10^{-9}.$$

	°	λ_0 calc.	λ_0 expt.	$\lambda_0\eta$.
Water	0	56·97	58·0 (35)	1·040
	25	110·55	112·5 (29)	1·0045
Furfural	0	26·61	30 (35)	0·7426
	25	45·17	50 (35)	0·7470
Nitromethane	25	107·62	113·8 (29)	0·7078
Nitrobenzene	25	35·07	40 (35)	0·7318
Acetonitrile	25	187·46	193·7 (35)	0·6773
Propionitrile	25	148·56	165 (35)	0·6816
Methyl alcohol	0	77·65	88 (35)	0·7189
	25	115·23	124 (35)	0·6756
Ethyl alcohol	0	34·54	34·5 (39)	0·6113
	25	55·77	55·0 (35), (29)	0·5978
Cyanacetic ethyl ester	25	23·22	28·2 (35)	0·7050
Benzonitrile	25	48·80	56·5 (35)	0·7062
Acetyl-acetone	25	77·72	75·2 (35)	0·5866
			81 (29)	0·6320
Epichlorhydrin	25	58·09	62·1 (35)	0·6396
Acetone	0	150·9	166·4 (38)	0·6592
	25	187·8	209·0 (38)	0·6599
	50	230·7	246·2 (38)	0·6556
Methyl-ethyl-ketone	25	145·6	151·0 (29)	0·6068
Pyridine	25	65·60	78·5 (35)	0·6856
Methyl thiocyanate	25	90·91	96 (35)	0·6901
Ethyl thiocyanate	25	78·91	84·5 (35)	0·6550

TABLE IV.

Tetra-ethyl-ammonium picrate.

$$\alpha+\alpha' = 0{\cdot}5627\ ;\ \beta+\beta' = 0{\cdot}000.$$

	°	$10^{-6}(\theta D)^2$.	λ_0 calc.	λ_0 expt.	$\lambda_0\eta$.
Water	0	580	31·38	31·0 (37)	0·5558
	18	549·9	53·22	53·38 (37)	0·5642
	100	425·5	199·4	197 (37)	0·5559
Methyl alcohol	0	104·9	68·87	72·5 (39)	0·5923
	25	82·8	103·25	102·9 (39)	0·5606
	56	70·9	150·1	153·4 (39)	0·5751
Ethyl alcohol	0	62·7	31·75	32 (39)	0·5670
	25	55·3	51·75	51·5 (39)	0·5598
	56	41·45	88·5	88·7 (39)	0·5636
Acetone	0	40·7	142·8	141·4 (38)	0·5601
	25	38·75	178·2	177·3 (38)	0·5598
	50	15·75	219·8	218·6 (38)	0·5594

Tables III. and IV. give corresponding values for tetra-ethyl-ammonium iodide and picrate.

Furfural is an interesting solvent, owing to its comparatively high dielectric constant (38), but it is troublesome to investigate, owing to its rapid polymerization. Agreement with Getman's results [10] is fairly good, considering the experimental difficulties.

$$1/\eta = 67{\cdot}1\ ;\ (\theta D)^2 = 1{\cdot}197 \times 10^8.$$

Salt	LiI	NaI	KI	RbI	NH_4I	NEt_4I
Exptl. ...	35·24	40·70	43·10	45·00	46·10	48·40
Calc.	39·34	42·11	46·01	47·40	48·05	44·10

Results for some other solvents are collected below * (all at 25° C.).

* Values in brackets here and in Table V. are experimental.

	Aceto-nitrile.	Epichlor-hydrin.	Propio-nitrile.	Benzo-nitrile.	Nitro-benzene.	Nitro-methane.
KI	196·0 (203)	—	—	—	—	114·25 (127·8)
NaI	179·6 (160)	— —	— —	44·24 (50·3)	—	—
NMe_4I	199·5 (205)	60·27 (73·8)	155·0 (185)			
NEt_4I	188·9 (200)	58·06 (66·8)	148·5 (163)	48·79 (56·5)	35·72 (40)	107·6 (113·8)
NPr_4I	—	51·42 (59)	142·0 (148)	43·32 (52·2)	31·98 (35)	
NAm_4I	159·4 (163)	—	—	—	30·15 (33)	
NMe_4Cl ...	—	54·71 (70)				
NMe_4Br ...	—	57·09 (73·7)				
NMe_4CNS ..	195·9 (223)	60·48 (74·7)	154·4 (187)			
NMe_4NO_3...	198·1 (220)	—	—	—	—	113·1 (125)

Finally, in Table V. are collected data for all those ions for which there are sufficient experimental results to justify their inclusion.

If the empirical equation

$$l\eta = \alpha + \beta(\theta D)^2 \quad . \quad . \quad . \quad . \quad . \quad \text{(iv.)}$$

is to be brought into line with the suggestions deduced by the method of dimensions, then we must have

$$l\eta = \alpha + \beta(\theta D)^2 = FeA/\sigma_1 + 9Fk^2\sigma_2 B(\theta D)^2/4e^3, \quad \text{(v.)}$$

whence

$$\alpha = 15{\cdot}35\ 10^{-8}\ A/\sigma_1 \quad \text{and} \quad \beta = 0{\cdot}121\ B\sigma_2, \quad . \quad \text{(vi.)}$$

and, as the values of α lie between 0·19 and 0·62, so σ_1/A will lie between 81×10^{-8} and 23×10^{-8}, and σ_1 will be of atomic dimensions if A is a numerical constant of quite moderate magnitude. Similarly, the values of β lie between 0·0 and $0{\cdot}89 \times 10^{-9}$, so that $B\sigma_2$ will lie between 0·0 and $0{\cdot}735 \times 10^{-8}$, and σ_2 can also represent an atomic dimension if B has a moderate numerical value.

In fig. 1 three functions are shown plotted against atomic number; these are: (1) values of the atomic radius (σ)

TABLE V. (See footnote on p. 264.)

			Water 18°.	Water 25°.	Water 100°.	Acetonitrile 25°.	Methyl alcohol 25°.	Ethyl alcohol 25°.	Acetone 25°.
$1/\eta$			94·59	112·0	354·35	289	183·5	92·0	316·7
$10^{-3} D^2\theta^2$			5·480	5·364	4·302	1·15	0·828	0·554	0·388
	α.	$10^{+9}\beta$.	l.	l.	l.	l.	l.	l.	l.
Li	0·1890	0·2919	33·01 (33·21)	38·69 (41·42)	120·5 (111·45)	—	39·12 (39·5)	18·88 (17·6)	63·44 (62·0)
F	·1701	·5941	46·89 (46·90)	—	—	—	40·24 (40·25)	—	—
Na	·2108	·4548	43·52 (43·27)	50·92 (50·93)	144·0 (145·8)	76·03 (89·4)	45·59 (45·6)	—	72·35 (68·7)
Mg	·2855	·3562	45·47 (45·41)	—	155·5 (177·0)	—	57·80 (57·7)	—	—
Cl	·2058	·8910	65·66 (65·65)	76·56 (76·57)	208·75 (206·9)	—	51·30 (51·3)	23·47 (21·4)	76·12 (104·7)
K	·2237	·8330	64·34 (64·34)	75·08 (75·10)	206·2 (202·25)	92·33 (96·4)	53·71 (53·7)	24·82 (24·6)	81·08 (69·7)
Ca	·2883	·4657	51·41 (51·42)	—	—	—	59·98 (60·0)	—	—
Cu	·2929	·3185	44·21 (44·23)	—	—	—	58·58 (58·6)	—	—
Zn	·2945	·3989	48·53 (48·54)	—	—	—	60·10 (60·1)	—	—
Br	·2305	·8863	67·74 ·77)	79·05 (78·44)	216 8 (209·5)	96·07 (97·4)	55·77 (55·7)	25 73 (22·5)	83·89 (82·0)
Rb	·2417	·8551	67 9 7)	78·43 (77 85)	—	—	57·35 (57·35	—	—
Sr	·2827	·4756	51·39 51·40)	—	—	—	59·10 (59·1)	—	—

Ag	·2332	·6125	53·86 (53·91)	62·96 (62·91)	175·95 (165·5)	—	52·10 (52·1)	24·57 (17)	
Cd	·2810	·4490	49·85 (49·87)	—	—	—	58·38 (58·4)	—	
I	·2675	·7920	66·35 (66·35)	77·52 (77·33	—	103·62 (106·6)	61·11 (61·1)	28·65 (26·3)	94·43 (115·9)
Cs.....	·2720	·8235	68·42 (68·21)	79·91 (78·34)	221·9 (188·1)	—	62·42 (62·2)	—	—
Ba	·2832	·5496	55·27 (55·17)	64·72 (63·1)	184·1 (183·0)	—	60·31 (60·1)	—	96·43 (85·6)
Tl.....	·2690	·7660	65·15 (65·69)	76·13 (75·53)	—	—	61·00 (61·0)		—
NH_4	·2614	·7706	64·67 (64·68)	—	210·1 (208·2)	—	59·67 (59·7)	27·98 (22)	92·25 (83·6)
NMe_4	·3085	·2030	—	46·75 (46·5)	—	95·90 (98·4)	59·68 (65·2)	28·49 (29·2)	100·19 (102·8)
NEt_4	·2949	—	27·89 (27·64)	33·02 (33·0)	104·5 (103·0)	85·22 (93·4)	54·11 (52·95)	27·13 (27·2)	93·39 (93·1)
NPr_4	·2265	—	—	25·37 (26)	—	—	—	—	71·74 (71·8)
NAm_4	·193	—	—	21·6 (18)	—	55·8 (56·4)	35·4 (25)	17·75 (16·7)	—
NH_2Et_2	·2862	·1019	—	38·17 (38)	—	—	54·07 (57)	26·85 (25·7)	91·89 (91·4)
NH_3Bt	·2441	·1777	—	38·00 (38)	—	—	47·48 (47·5)	23·36 (20·9)	79·5 (92·4)
NO_2	·2380	·7524	—	71·84 (71·85)	—	—	55·10 (55·1)	—	—
NO_3	·2735	·6978	62·04 (62·05)	72·53 (72·56)	203·25 (202·0)	102·23 (121·6)	60·78 (60·8)	28·72 (26)	95·17 (109·8)
BrO_3	·2658	·4482	48·37 (48·38)	—	—	—	55·58 (55·6)	—	—
ClO_3	·2910	·5313	55·06 (55·08)	—	—	—	61·46 (61·5)	—	—
ClO_4	·3368	·5125	58·42 (58·6)	68·50 (75·5)	198·7 (174·8)	—	69·58 (69·9)	—	112·97 (115·6)
SO_4	·6236	·1859	68·63 (68·21)	80·99 (81·50)	249·3 (249·0)	—	—	—	—
CNS	·2781	·5902	56·89 (56·90)	—	188·1 (193·5)	99·97 (125·6)	59·99 (60·0)	28·60 (26)	95·32 (86·4)
Pic	·2678	—	25·33 (25·5)	29·98 (30·7)	94·88 (93·5)	77·40 (78)	49·14 (49·9)	24·64 (24·2)	84·80 (84·2)

deduced from measurements of crystals[2] and from the viscosities[31] of the inert gases; (2) values of β; and (3) values of $1/\alpha$ from Table V. It will be seen that in every case maxima occur at the halogens and alkali metals with minima between, but that in the cases of σ and β the maxima tend to increase in height with increasing atomic number. The reverse is true for $1/\alpha$; here the maximum at $Z=9$ is much higher than the rest, and, by the time $Z=53$ is reached, fluctuations of $1/\alpha$ with Z have almost died out.

Fig. 1.

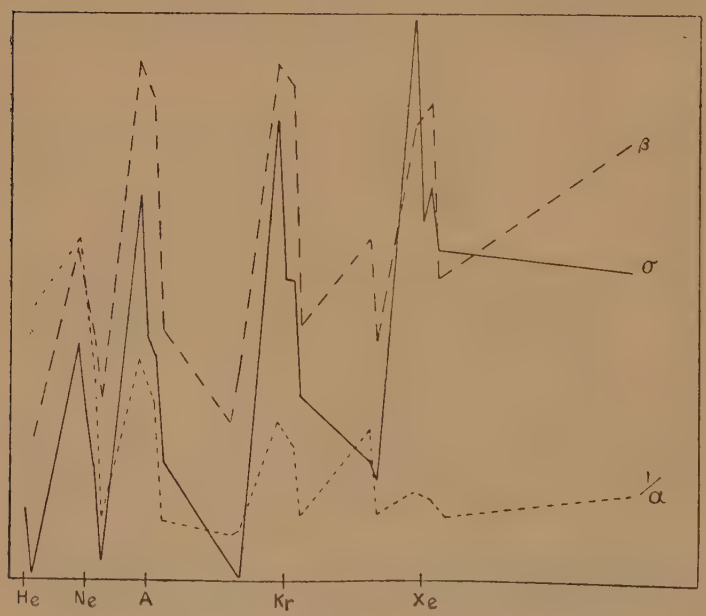

In fig. 2 Bragg's values for σ are plotted (i.) against β, and (ii.) against $1/\alpha$, and it is again evident that while β and σ appear to be intimately related for these elementary ions, the relationship between $1/\alpha$ and σ involves some other variable.

It must not, however, be assumed that the quantities denoted by σ_1 and σ_2 in equations (v.) and (vi.) are actual atomic radii; if they were, we should be led to the absurd conclusions (1) that the alkyl-ammonium ions have zero radius, and (2) that the ions ClO_3 and ClO_4 are smaller than Cl. These considerations drive us to the conclusions that σ_2

represents some function of the dimensions of an ion which approximates to the radius in the case of elementary ions. This is not unreasonable when we consider that in compound ions the effect of the ionic charge on the solvent is partly

Fig. 2.

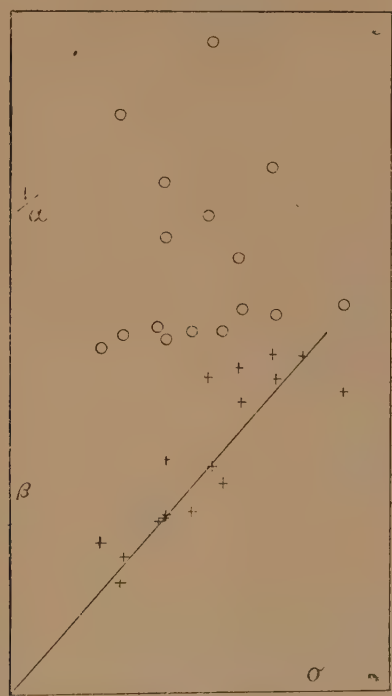

screened by those parts of the ion which carry no charge, *e.g.* by the C_2H_5 groups round the charged N-atom in $N(C_2H_5)_4$.

References.

(1) Bhattagharrya & Dhar, *Proc. K. Acad. West. Amst.* xviii. p. 373 (1915).
(2) Bragg, Phil. Mag. ii. p. 258 (1926).
(3) Born, *Zt. für Phys.* i. p. 221 (1920).
(4) Debye & Hückel, *Phys. Zt.* xxiv. pp. 187, 305 (1923).
(5) Déguisne, Wied. *Ann.* lii. p. 604 (1894).
(6) Dempwolff, *Phys. Zt.* v. p. 637 (1905).

(7) Duthoit & Duperthuis, *J. Chim. Phys.* vi. p. 728 (1908).
(8) Duthoit & Nicollier, *Zt. Elektrochem.* xii. p. 643 (1906).
(9) Duthoit & Rappeport, *J. Chim. Phys.* vi. p. 545 (1908).
(10) Getman, *J. Phys. Chem.* xxviii. p. 212 (1924).
(11) Goldschmidt, *Zt. phys. Chem.* lxxxix. p. 129 (1914; xcix. p. 128 (1921).
(12) Hägglund, *J. Chim. Phys.* x. p. 210 (1912).
(13) Hartley, Applebey, & Garrod Thomas, J. C. S. xciii. p. 538 (1906).
(14) Hartley & Frazer, Proc. Roy. Soc. cix. p. 351 (1925).
(15) Hartley & Raikes, Trans. Farad. Soc. xxiii. p. 393 (1927).
(16) Hoskings & Lyle, Phil. Mag. iii. p. 487 (1902).
(17) Jones & Clover, Amer. Chem. J. xliii. p. 187 (1910).
(18) Jones & Douglas, Amer Chem. J. xxvi. p. 428 (1901).
(19) Jones & West, Amer. Chem. J. xxxiv. p. 357 (1905).
(20) Kahlenberg, *J. Phys. Chem.* v. p. 339 (1901).
(21) Kohlrausch, 'Landolt & Börnstein's Tables.'
(22) Lorenz & Michael, *Zt. anorg Chem.* cxvi. p 161 (1921).
Lorenz & Voigt, *ibid.* cxlv. p. 277 (1925).
(23) McBain & Coleman, Trans. Farad. Soc. xv. p. 27 (1919).
(24) Milner, Phil. Mag. xxiii. p. 551 (1912), and xxv. p. 743 (1913).
(25) Nernst & Löb, *Zt. phys. Chem.* ii. p. 948 (1888).
(26) Noyes, Melcher, Eastman, & Kato, J. Amer. C. S. xxx. p. 335 (1908), and xxxii. p. 157 (1910).
(27) Ostwald & Nernst, *Zt. phys. Chem.* iii. p. 120 (1889).
(28) Parker & Parker, J. Amer. C. S. xlvi. p. 312 (1924).
(29) Philip & Courtman, J. C. S. xcviii. p. 1269 (1910).
(30) Rabinowitsch, *Zt. phys. Chem.* xcix. pp. 338, 417 (1921).
(31) Rankine, Phil. Mag. xlvii. p. 612 (1921), and xliv. pp. 289, 292, 508; Proc. Roy. Soc. lxxxviii. p. 575 (1913), and cvi. p. 83 (1924).
(32) Schmick, *Zt. für Phys.* xxiv. p. 56 (1924).
(33) Stearn, J. Amer. C. S. xliv. p. 670 (1922).
(34) Stenquist, *Zt. Elektrochem.* xxv. p. 29 (1898).
(35) Walden, 'Leitvermögen der Lösungen.'
(36) Walden, *Ber.* xxxii. p. 2865 (1899); *Zt. phys. Chem.* lv. p. 207 (1906).
(37) Walden & Ulich, *Zt. phys. Chem.* cvi. p. 49 (1923).
(38) Walden, Ulich, & Busch, *Zt. phys. Chem.* cxxiii. p. 429 (1926)
(39) Walden, Ulich, & Laun, *Zt. phys. Chem.* cxiv. p. 275 (1925).
(40) Washburn & McInnes, J. Amer. C. S. xxxiii. p. 1686 (1911).
(41) Whetham, Phil. Trans. cxciv. p. 321 (1900).
(42) Wood, *Zt. phys. Chem.* xviii. p. 521 (1895).

Electrical Laboratory,
Oxford.

XXIV. *Factors governing the Appearance of the "Forbidden Line" 2656 in the Optical Excitation of Mercury.* *By* R. W. Wood *and* E. Gaviola *.

[Plate III.]

THE appearance of the forbidden line 2656 of mercury in optically-excited vapour at room temperature in the presence of nitrogen at 3 or 4 mm. pressure has been described by Wood. Because of the importance which the appearance of this line has for the theory of spectra, a further investigation was made to determine the most favourable conditions for its development.

The forbidden line appears on the long wave-length side of the pseudo-triplet 2652, 2654, 2655, the relative intensities of which, if nitrogen or water vapour is present in the tube, are about 4 : 8 : 1. With dry nitrogen at a pressure of 3 to 6 mm. in the resonance tube, the intensity of the "forbidden line" is about equal to the intensity of 2655. That has been shown by Wood in pl. xiv. fig. 2, Phil. Mag., Sept. 1927. In the course of the present investigation we have been able to increase the relative intensity of the "forbidden line" about five times, so that it can be obtained stronger than 2652 and nearly equal to the strongest line of the triplet 2654, see Pl. III. (In *vacuo* the relative intensity of the lines of the triplet is quite different.)

Wood has observed that the "forbidden line" appears only if nitrogen is able to bring up strongly the "water-band," which is due to OH produced by the dissociation of water molecules. This circumstance makes it appear probable that the transition $2^3p_0-1^1S_0$ is in some way connected with the presence of water vapour in the tube. The next step was to try the effect of different quantities of water vapour mixed with the nitrogen.

To accomplish this the bulb containing nitrogen, which was connected to the fluorescence tube by a fine capillary, was supplemented by another bulb containing copper-sulphate crystals which are in equilibrium with water vapour at a pressure of about 3 mm. at room temperature. If the stop-cock is opened, small quantities of water vapour can be introduced into the tube. A series of photographs taken with 5 mm. of nitrogen and increasing quantities of water vapour in the tube showed that the intensity of the "forbidden line" increases at first rapidly, until the water

* Communicated by the Authors.

vapour has attained a partial pressure of about $\frac{1}{2}$ mm., and then more slowly up to a pressure of 2 or 3 mm. At these higher pressures the intensity decreases rapidly with time owing to the formation of hydrogen, as we shall see later. The OH bands follow a similar course, except that while the "forbidden line" increases its relative intensity 3 or 4 times, the water band increases about 10 times.

The next step was to try whether water vapour alone, without the co-operation of nitrogen, was able to develop the forbidden line. The result was that if 2 or 3 mm. of water vapour were introduced into the tube the whole fluorescence, including the OH band and the "forbidden line," was at first very bright, but became rather faint in a few minutes. It was difficult to photograph the lines under those conditions, because it was necessary to renew the water-vapour charge every 2 or 3 minutes. Wood had observed in previous work that something similar occurred with nitrogen. The fluorescence intensity diminished with the time and the charge had to be renewed. He found that the reason for this was that hydrogen developed in the resonance tube, which could be detected with a small auxiliary discharge-tube connected with the resonance system, and hydrogen is known to be very active in destroying the fluorescence of mercury. With water vapour in the tube hydrogen was developed also, but much more rapidly than in the case of nitrogen, in which case the water vapour probably came from the walls of the tube. On the other hand, it was observed that if the tube was not completely evacuated before introducing the water vapour, so that about 0·1 mm. of air was left in it, the fluorescence remained bright for a much longer time before beginning to fade. Air was then able to compensate the action of hydrogen. To study the action of air a third very fine and long capillary was sealed in, in addition to the water and nitrogen capillaries. Its free end was sealed and could be opened to the air of the room by breaking its end. The capillary was made of such size that, with *vacuo* in the tube, it let pass in one minute a quantity of air sufficient to raise the pressure by 0·03 mm. Thus one could measure the quantity of air introduced by noticing the time that the capillary was open, from the moment when its end was broken until it was again sealed with a small gas flame. It was then observed that if, for instance, 2 mm. of water vapour had been in the tube, and the fluorescence became faint at the end of a few minutes if the air capillary was opened, the fluorescence intensity increased greatly until a maximum was reached. If now the capillary was sealed

the fluorescence remained bright for 3 or 4 minutes and then gradually faded again, returning, however, to its maximum on admitting more air. The quantity of air required to bring the visible fluorescence to a maximum was about 0·03 mm., and if the regenerating action of air is due to the neutralization of hydrogen by combination with oxygen, forming HO or H_2O, we see that about 0·012 mm. of free hydrogen was developed in the tube, since in 0·03 mm. of air only 0·006 mm. of oxygen is present. That such a small quantity of hydrogen is able to diminish the fluorescence at least 4 or 5 times is extremely interesting, and we shall see later the explanation of this fact.

If the air capillary is not sealed when the visible fluorescence becomes a maximum, but is left open for a few seconds more, permitting the entrance of an additional one or two thousandths of a millimetre of oxygen, fluorescence disappears entirely, and the tube is in the "dark state." If now it is left to itself, after a few minutes of darkness the fluorescence suddenly appears again and rises to a maximum value in a few seconds. The time that the tube remains "dark" seems to be proportional to the quantity of free oxygen in it. This surprising action of such a small quantity of oxygen in destroying the whole fluorescence was traced to the fact that the oxygen oxidizes all of the mercury vapour, which deposits as HgO on the walls of the tube as a yellow layer. While the tube is in the "dark state" no mercury vapour is present in the region illuminated by the arc. As long as free oxygen remains in the tube all the mercury vapour that is evaporating from the mercury drop at the bottom of the tube is immediately oxidized when it enters the region illuminated by the arc. The free oxygen is used so slowly by the evaporating mercury that the phenomenon might be used for measuring the velocity of evaporation of mercury. As soon as all of the free oxygen is consumed in this way the evaporating mercury vapour again fills the tube and the fluorescence reappears with full intensity. That the mercury vapour is really "cleaned up" by 0·001 mm. of oxygen has been tested by measuring the absorption of the line 2537 of the arc across the resonance tube. As soon and as long as the tube is in the "dark state" 2537 is not absorbed at all, showing that no mercury vapour is present.

For the "cleaning up" of the mercury vapour by a few thousandths of a millimetre of oxygen it is necessary that some water vapour be present in the tube. If only mercury vapour is present and we introduce 0·001 mm. of pure

oxygen the fluorescence will diminish but little. In the presence of water vapour it disappears completely. The oxidation of mercury seemed then to be due to a catalyzing action of water vapour, and it was found that nitrogen is also able to catalyze that reaction, which explains why air destroys the fluorescence to a greater degree than oxygen. Now the principal and common action of nitrogen and water vapour on the optically-excited mercury is the bringing (by collisions) of a large number of excited atoms to the metastable condition with electrons on the 2^3p_0 level, where they accumulate, due to the long mean life of that state. The energy of the metastable atoms is probably the real catalyzer of the reaction. The conditions for the rapid oxidation of the mercury vapour are then (1) to have the necessary quantity of free oxygen, and (2) to have a large number of metastable atoms.

The necessary condition for the appearance of the forbidden line seems then to be the formation of a large number of metastable atoms. Water vapour, if no free hydrogen is present, is more efficient than nitrogen in bringing atoms to the metastable level. This has been proved by measuring the absorption of the arc line 4046, which is absorbed only by the metastable atoms, and 0·005 mm. of water vapour in the tube is sufficient to cause the reversal of 4046 if photographed with the large quartz Lummer-Gehrke plate, while 0·5 mm. of nitrogen is necessary to do the same.

On the other hand, the absorption line appears very narrow with 0·1 to 0·5 mm. of water vapour (only the core of the 4046 line is absorbed), while with 0·1 to 1 mm. nitrogen it appears to be much broader. For this reason a reversal of the line appears with water as soon as the absorption begins to be noticeable, while with nitrogen the absorption is at first nearly homogeneous for the whole width of the arc line, so that, in spite of the absorption, "reversal" does not appear. From the measurements of Stuart* and others, it is known that water vapour is more efficient than nitrogen in diminishing the intensity of the resonance line. The result of the collisions in both cases is to bring atoms from 2^3p_1 to 2^3p_0. Water brings then by equal pressure more atoms to the metastable level than nitrogen. The broadening of the level 2^3p_0 in the case of nitrogen can be interpreted as showing that nitrogen is more efficient than water vapour in shortening the life of that level, and that collisions of the second kind with metastable atoms take place more often

* Stuart, *Zeits. f. Phys.* xxxii. p. 262 (1925).

with N_2 than with water. This diminishes the number of metastable atoms in the case of nitrogen, and by shortening the life of the 2^3p_0 state broadens the absorption line 4046. K. Donat* has found that metastable atoms are more sensitive to collisions with nitrogen than with argon. In our case water seems to act in a way similar to that of argon as observed by Donat. This may be the reason for the stronger development of the "forbidden line" with water than with nitrogen. It is of theoretical importance to know if there is a small spontaneous transition probability of the $2^3p_0 - 1'S_0$ transition, *i. e.*, if the intensity of the forbidden line is simply proportional to the number of metastable atoms, or if it is necessary to "disturb" the metastable atoms to obtain that transition, which otherwise would not occur. So far we cannot give a conclusive answer to this question. If a spontaneous transition probability exists, the intensity of the "forbidden line" in fluorescence should be proportional to the total absorption of 4046 under all conditions. If disturbances are necessary the ratio $\frac{\text{intensity of 2656}}{\text{absorption of 4046}}$ should vary with changing conditions; for instance, if instead of nitrogen water vapour is used. This point will be investigated further.

The use of water vapour for bringing up the "forbidden line" has the disadvantage that under illumination it generates free hydrogen more rapidly than does nitrogen, and hydrogen is known to be very efficient in shortening the life of the metastable atoms as well as the intensity of the resonance line †. A very small quantity of free hydrogen diminishes considerably the intensity of 2656 and of the OH band. If water vapour is then used it is necessary to neutralize the free hydrogen every few minutes by admitting a suitable quantity of oxygen or air. On the contrary, a mixture of 2 or 3 mm. of nitrogen and 0·1 to 0·4 mm. of water vapour seems to very efficient in developing the "forbidden line" and it remains bright for a long time. The way to maintain the fluorescence at maximum intensity is to have some oxide, for instance HgO, in the interior of the tube. If then water vapour or water and nitrogen is introduced, the free hydrogen that might develop will reduce the oxide and regenerate the water vapour ‡. The

* K. Donat, *Zeits. f. Phys.* xxix. p. 345 (1924). Also S. Loria, Phys. Rev. xxvi. p. 573 (1925).

† See Franck und Jordan, *Anregung von Quantensprüngen durch Stösse*, p. 229. Dorgelo, *Physika*, v. p. 429 (1925).

‡ Franck und Cario, *Zeits. f. Phys.* xi. p. 161 (1922).

yellow deposit of mercury oxide that appears sometimes at the walls of the tube, absorbing strongly the ultra-violet light, can be reduced easily in this way. It is only necessary to introduce 1 mm. of hydrogen in the tube and to illuminate it for about 10 minutes. The yellow film disappears and small mercury droplets remain on the walls of the tube.

Pl. III. shows the relative intensity of the "forbidden line" in regard to the pseudo-triplet 2652, 2654, 2655. The photograph "*a*" was taken while 5 mm. of nitrogen and a little water vapour were in the tube, photograph "*b*" while the partial pressure of water vapour was increased to 2 mm. The considerable increment of 2655·8 is plainly shown. The exposure times of the reproduced photographs were about 7 minutes.

XXV. *On the Theory of the Pianoforte String.* *By* Dr. Kulesh Chandra Kar *.

In recent years a number of interesting papers have appeared on the vibrations of the pianoforte string, an account of which has been given in a previous article † by the author in collaboration with Messrs. Ganguly and Laha. In that account we did not refer to the theory advanced some eight years ago by C. V. Raman and B. Banerji ‡, as we thought there were serious objections against that theory. Nowadays there appears to be a tendency amongst the experimental workers on the subject, like W. H. George § and others, to give more prominence to the theory than, we think, is due. In the circumstances it seems necessary to point out the mathematical errors that have crept in, which arise out of their misconceptions about the convergency of a Fourier's series.

The writer regrets the article could not be made ready for publication earlier owing to pressure of work.

Now, in their theory referred to above, Raman and Banerji have considered the motion of the string during the time of contact as that of a loaded string. Thus the motion

* Communicated by the Author.

† Kar, Ganguly, and Laha, Phil. Mag. v. p. 547 (1928).

‡ Raman and Banerji, Proc. Roy. Soc. A, vol. xcvii. p. 100 (1920).

§ W. H. George, Phil. Mag. vol. xlviii. p. 34 (1924); also Proc. Roy. Soc. vol. cviii. p. 293 (1925).

of the string during the time the hammer is in contact is given by the following equations of Lord Rayleigh * (Rayleigh, 'Theory of Sound,' vol. i. p. 204):

$$-M\lambda \sin \lambda a \sin \lambda b = \rho \sin \lambda l \text{ (frequency equation)}, \quad (1)$$

and

$$y = \sum_r P_r \sin \lambda_r x \sin \lambda_r a \cos (c\lambda_r t - \epsilon_r) \quad . \quad . \quad (2\,a)$$

between $x=0$ and $x=a$,

$$y = \sum_r P_r \sin \lambda_r (l-x) \sin \lambda_r b \cos (c\lambda_r t - \epsilon_r) \quad . \quad (2\,b)$$

between $x=a$ and $x=l$,

where P_r, e_r are arbitrary constants, a and b are the two parts into which the string of total length l is divided by the hammer or the load, c is the velocity of the wave along the string, M the mass of the hammer, and ρ the linear density of the string. As, however, the system is started into motion by initial velocity at $x=a$ by the hammer whose velocity just before contact is v, one set of arbitrary constants, say ϵ_r, will drop out and the equations will take the form:

$$y = \sum_r P_r \sin \lambda_r x \sin \lambda_r (l-a) \sin c\lambda_r t \quad . \quad . \quad (3\,a)$$

between $x=0$ and $x=a$,

$$y = \sum_r P_r \sin \lambda_r (l-x) \sin \lambda_r a \sin c\lambda_r t \quad . \quad . \quad (3\,b)$$

between $x=a$ and $x=l$,

and thus at $x=a$

$$y_0 = \sum_r P_r \sin \lambda_r a \sin \lambda_r b \sin c\lambda_r t. \quad . \quad . \quad (3\,c)$$

The arbitrary constants P_r, etc. of the above series can be evaluated from the initial conditions either directly or with the help of Art. 101 of Lord Rayleigh's 'Theory of Sound,' vol. 1. The second method, which will be called Rayleigh's method, has been followed by Raman and Banerji. In the present paper it seems advisable to give both the methods.

Rayleigh's Method.

It follows directly from equation (7) of art. 101 referred to above (with present notations):

$$y_0 = \sum_r \sin c\lambda_r t \,.\, \frac{P_r^2 \sin^2 \lambda_r a \sin^2 \lambda_r b}{c\lambda_r \int \rho u_r^2 dx} \,.\, Mv, \quad . \quad . \quad (4)$$

* Notations have been slightly change

where M is the mass of the load, *i. e.* hammer, v its velocity before impact, and

$$\int \rho u_r^2 dx = \rho \int_0^a P_r^2 \sin^2 \lambda_r x \sin^2 \lambda_r b \, dx$$
$$+ \rho \int_a^l P_r^2 \sin^2 \lambda_r (l-x) \sin^2 \lambda_r a \, . \, dx \, . \quad (5)$$

Taking the value of $\rho \int u_r^2 dx$ as given in (5), we have from (4), after a number of transformations,

$$y_0 = \sum_r \frac{2v}{c\lambda_r} \sin c\lambda_r t \, . \, \frac{1}{\frac{\rho}{M}\left(\frac{a}{\sin^2 \lambda_r a} + \frac{b}{\sin^2 \lambda_r b}\right) - 1}, \quad . \quad (6)$$

which is different from that obtained by Raman and Banerji *.

Direct Method.

From equations (3 a) and (3 b) we have on differentiating and putting $t=0$,

$$(\dot{y})_0 = \sum_r P_r \lambda_r c \sin \lambda_r x \sin \lambda_r b. \quad . \quad . \quad . \quad . \quad (7\,a)$$

between $x=0$ and $x=a$,

$$(\dot{y})_0 = \sum_r P_r \lambda_r c \sin \lambda_r (l-x) \sin \lambda_r a \quad . \quad . \quad . \quad (7\,b)$$

between $x=a$ and $x=l$,

and hence, using the normal property of the function, we get

$$\int_0^a \rho (\dot{y})_0 \sin \lambda_r x \, dx = P_r \lambda_r c \rho \sin \lambda_r b \int_0^a \sin^2 \lambda_r x \, dx \quad . \quad (8\,a)$$

$$\int_a^l \rho (\dot{y})_0 \sin \lambda_r (l-x) \, dx = P_r \lambda_r c \rho \sin \lambda_r a \int_a^l \sin^2 \lambda_r (l-x) \, dx. \quad (8\,b)$$

Remembering now that $(\dot{y})_0 = 0$ except at $x=a$, we have the left-hand sides of equations (8 a) and (8 b) equal to

$$\rho (\dot{y})_0 \sin \lambda_r a \, dx_1 \quad \text{and} \quad \rho (\dot{y})_0 \sin \lambda_r b \, dx_2$$

respectively.

Thus we have from (8 a) and (8 b)

$$\rho (\dot{y})_0 dx_1 = P_r \lambda_r c \rho \, . \, \frac{\sin \lambda_r b}{\sin \lambda_r a} \int_0^a \sin^2 \lambda_r x \, dx, \quad . \quad . \quad (9\,a)$$

$$\rho (\dot{y})_0 dx_2 = P_r \lambda_r c \rho \, . \, \frac{\sin \lambda_r a}{\sin \lambda_r b} \int_a^l \sin^2 \lambda_r (l-x) \, dx. \quad . \quad (9\,b)$$

* If, however, the Wad, *i.e.*, the hammer, is taken as part of the string, then both the methods will give the same equation as that obtained by Raman and Banerji.

On adding (9 a) and (9 b), we get

$$Mv = P_r\lambda_r c\rho \left[\frac{\sin\lambda_r b}{\sin\lambda_r a}\int_0^a \sin^2\lambda_r x\,dx + \frac{\sin\lambda_r a}{\sin\lambda_r b}\int_a^l \sin^2\lambda_r(l-x)\,dx\right] \quad . \quad . \quad (10)$$

Hence we have, after transformation,

$$P_r = \frac{2Mv\sin\lambda_r a\sin\lambda_r b}{\lambda_r c\rho\left\{a\sin^2\lambda_r b + b\sin^2\lambda_r a - \frac{\sin\lambda_r a\sin\lambda_r b\sin\lambda_r l}{\lambda_r}\right\}} \quad . \quad . \quad . \quad (11)$$

Substituting the above value of P_r in (3 c), we have y_0 equal to that given in equation (6). Thus both the methods lead to the same result.

Now the above equation (6) gives the value of y_0 as an infinite series. And if λ's in the different terms have simple ratios—in which case only is there great acoustical interest,—the sum will represent a Fourier's series. It is well known to mathematicians (*vide* Hobson, 'Theory of Functions of a Real Variable, etc.,' p. 635 *et seq.*) that $\sum_{\lambda_r}\frac{\sin c\lambda_r t}{\lambda_r}$ between $-\pi$ and $+\pi$ is a non-uniformly convergent series representing a discontinuous curve. And therefore it cannot be further differentiated term by term. It can be easily seen that the right-hand side of equation (6) is exactly of the same form as above except the factor*

$$\frac{1}{\frac{\rho}{M}\left(\frac{a}{\sin^2\lambda_r a} + \frac{b}{\sin^2\lambda_r b}\right) - 1} \quad . \quad . \quad . \quad . \quad (12)$$

Now $\sin^2\lambda_r a$, $\sin^2\lambda_r b$ in the above expression vary from 0 to 1. If we take the minimum value 0, then the whole expression becomes zero. If, however, we take the greatest value, the expression becomes $\frac{M}{m-M}$, where m is the mass of the string. Thus the value of expression (12) cannot exceed $\frac{M}{m-M}$, and it has the same sign as $\frac{M}{m-M}$. The

* Raman and Banerji have got the value

$$\frac{1}{\frac{\rho}{M}\left(\frac{a}{\sin^2\lambda_r a} + \frac{b}{\sin^2\lambda_r b}\right) + 1}.$$

value of (12) therefore varies between 0 and $\frac{M}{m-M}$ and does not change sign. If we take any possible value (say k) between the limits 0 and $\frac{M}{m-M}$ of the factor (12) for all the terms of the series, equation (6) becomes

$$y_0 = 2v\kappa \sum_r \frac{\sin c\lambda_r t}{c\lambda_r} \quad . \quad . \quad . \quad . \quad . \quad . \quad (13)$$

The right-hand side of equation (13) is convergent. But on differentiating term by term, the series thus obtained becomes divergent. Thus $\frac{dy_0}{dt}$ or $\frac{d^2y_0}{dt^2}$ cannot be obtained by differentiating equation (6) as has been done by the previous writers (*loc. cit.*) to obtain the pressure of the hammer.

In conclusion we may quote the remark made by Raman and Banerji about such a *divergent* series :—" . . . a difficulty arises in attempting to carry out a numerical summation of the series for all values of t, owing to the discontinuous nature of the function which the sum represents. This difficulty may, however, be evaded," etc.

Note added in proof.—Further results confirming the above view have been obtained. They will be very shor ready for the press.

Physical Laboratory,
Presidency College, Calcutta,
March 1928.

XXVI. *X-Ray Analysis of Silver Aluminium Alloys.* By Prof. A. F. Westgren *and* A. J. Bradley, *M.Sc., Ph.D.**

[Plate IV.

THE silver aluminium system has been investigated by Petrenko †, who arrived at the equilibrium diagram reproduced in fig. 1. According to this, there should be

* Communicated by the Authors.
† *Zeitschrift f. anorg. Chemie*, xlvi. p. 49 (1905).

two intermediate phases present in this system at ordinary temperatures, one corresponding to Ag_3Al and the other being a "mixed crystal" phase made up of Ag_3Al and Ag_2Al. Both should be formed through transformation in the solid state.

In the following the former phase is called β' and the latter γ. The solid solution of aluminium in silver is denoted by α, and the aluminium phase by δ.

In order to make an X-ray analysis of the system, we have produced a series of alloys by melting together pure

Fig. 1.

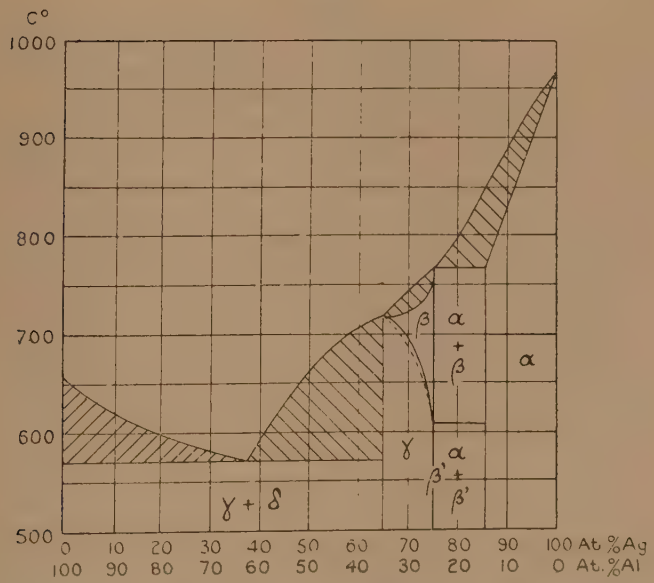

Equilibrium diagram of the Ag–Al-system according to Petrenko.

silver with electrolytic aluminium in different proportions. The composition of the specimens was controlled by chemical determinations of both silver and aluminium. Small pieces of the alloys were filed or crushed into fine powder, which was recrystallized by heating *in vacuo* for some minutes to a temperature about 100° C. below the melting-point. From these powders, photograms were taken in a set of focussing cameras constructed by G. Phragmén.

From the series of photograms reproduced in Pl. IV. it is evident that Petrenko's statement concerning the number

of intermediate phases present at ordinary temperatures is correct. Each phase gives a characteristic pattern of lines, and specimens containing two phases give the patterns corresponding to each phase, superimposed one upon the other. The phases corresponding to each alloy can thus be picked out by inspection. Evidently the β' phase corresponds exactly to the formula Ag_3Al with a very narrow range of homogeneity, alloys with 24 and 26 atomic per cent. of aluminium both containing another phase. The other intermediate phase is homogeneous in the range 27–40 atomic per cent. of aluminium.

The α- and δ-Phases.

The lattice parameter of pure silver was found to be 4·079 Å., in good agreement with the values given by W. L McKeehan * (4·080 Å.), W. P. Davey † (4·079 Å.), and T. Barth & G. Lunde ‡ (4·078 Å.). In a homogeneous α-phase specimen containing 19 atomic per cent. aluminium the lattice parameter had fallen to 4·056 Å., and in the saturated phase co-existent with β' it had fallen to 4·053 Å.

The δ-phase had in equilibrium with γ the same lattice parameter as pure aluminium, *i.e.* 4·042 Å., which proves that the solubility of silver in aluminium is very small.

The mean error of the parameter values given may be estimated at 0·002 Å.

The Phase Ag_3Al.

The β'-phase is in equilibrium with α in the range 20–25 atomic per cent. Al, and with γ in the 25–27 atomic per cent. Al. Its interference lines show no displacement, which proves that the phase is homogeneous in a range so narrow that it may be denoted by a mere line in the equilibrium diagram. An alloy, giving lines only of β' and showing interferences neither of α nor of γ, contained exactly 25 atomic per cent. Al. The phase must therefore be Ag_3Al.

Its structure is of considerable interest, being the same as that of the so-called β-modification of manganese, which

* Phys. Rev. (2) xx. p. 424 (1922).
† Phys. Rev. (2) xxv. p. 753 (1925).
‡ *Zeitschr. f. physik. Chemie,* cxxi. p. 78 (1926).

is stable at higher temperatures *. A comparison between the X-ray data of Ag_3Al, given in Table I., and those of β-manganese, given by Westgren and Phragmén †, shows a close similarity in structure.

In Table I. the intensity, I, of the interferences are denoted by st. = strong, m. = medium, w. = weak, and v.w. = very weak. $h_1 h_2 h_3$ are the Miller indices $\Sigma h^2 = h_1^2 + h_2^2 + h_3^2$, and θ is the deflexion-angle. The radiation used was FeK, with the wave-lengths $\alpha_1 = 1{\cdot}932$ Å., $\alpha_2 = 1{\cdot}936$ Å., and $\beta = 1{\cdot}753$ Å.

TABLE I.

Power Photograms of Ag_3Al.

I.		Radiation.	$\sin^2\frac{\theta}{2}$.	$\frac{\sin^2\theta}{2}$.
m.	5	α	0·097	0·01940
w.	6	α	0·117	0·01950
m.	9	β	0·1435	0·01594
w.	10	β	0·160	0·01600
st.	9 11	α β	0·175	0·01944 0·01591
st.	10	α	0·195	0·01950
m.	11	α	0·2145	0·01950
m.	14	α	0·2725	0·01945
w.	18	β	0·2875	0·01597
w.	20	β	0·3205	0·01603
v.w.	17	α	0·330	0·01941
st.	18	α	0·350	0·01944
st.	20	α	0·389	0·01945
vw.	25	β	0·3995	0·01598
w.	21	α	0·408	0·01943
m.	26	β	0·415	0·01596
m.	22	α	0·4275	0·01943
w.	27	β	0·4325	0·01600
m.	29	β	0·4655	0·01605
vw.	30	β	0·480	0·01600
m.	25	α	0·487	0·01948
st.	26	α	0·5065	0·01948
m.	27	α	0·526	0·01948
v.w.	35	β	0·562	0·01606
st.	29	α_1	0·5655	0·01950
m.	29	α_2	0·568	0·01959
vw.	36	β	0·5785	0·01607
m.	30	α_1	0·585	0·01950
w.	30	α_2	0·587	0·01957
v.w.	37	β	0·5945	0·01605
w.	38	β	0·610	0·01606

* A. Westgren and G. Phragmén, *Zeitschrift f. Physik*, xxxiii. p. 777 (1925). A. J. Bradley, Phil. Mag. l. p. 1018 (1925).

† *Loc. cit.*

TABLE I. (*continued*).

Power Phograms of Ag_3Al.

I.		Radiatio .	$\sin^2\frac{\theta}{2}$.	$\frac{\sin^2\theta}{2}$.
v.w.	41	β	0·6585	0·01610
w.	34	α_1	0·663	0·01950
v.w.	34	α_2	0·666	0 01959
st.	35	α_1	0·682	0·01949
m.	35	α_2	0·685	0·01958
st.	36	α_1	0·702	0·01950
m.	36	α_2	0·705	0·01959
m.	37	α_1	0·721	0·01949
w.	37	α_2	0·724	0·01956
st.	38	α_1	0 7405	0·01948
m.	38	α_2	0·7435	0·01956
v.w.	40	α_1	0·780	0·01950
v.w.	49	β	0·7865	0·01605
m.	41	α_1	0·798	0·01946
m.	41	α_2	0·802	0·01956
v.w.	42	α_1	0·8185	0·01949
w.	43	α_1	0·838	0·01949
v.w.	43	α_2	0·841	0·01956
v.w.	53	β	0·8505	0·01605
v.w.	54	β	0·8665	0·01605
st.	45	α_1	0·876	0·01947
m.	45	α_2	0·880	0·01956
v.w.	46	α_1	0·896	0·01948
v.w.	56	β	0·898	0·01604
v.w.	57	β	0·914	0·01604
w.	59	β	0·946	0·01604
st.	49	α_1	0·954	0·01947
m.	49	α_2	0·9585	0·01956
st.	50	α_1	0·974	0·01948

The phase is cubic, and the strongest reflexions found correspond to the Σh^2-values 9, 10, 11, 14, 18, 20, 26, 29, etc., just as in the β-manganese photogram. The edge of the elementary cube is calculated to be $6{\cdot}920 \pm 0{\cdot}003$ A°., and the density of the phase is found to be 8·74. A calculation of the number of atoms per unit cell on the basis of these data gives the value 20·01, *i. e.* 20.

Westgren and Phragmén could not definitely settle whether the number of atoms in the elementary cube of β-manganese was 20 or possibly 160. They found some faint interferences which could only be explained if the cube was large enough to contain the latter number of atoms. No interferences of this kind have been observed in the Ag_3Al photograms, and from the close analogy of this phase with β-manganese it may be concluded that the

latter substance has also 20 atoms in its elementary cube. The extra interferences observed were probably due to some oxide content or to some other slight contamination of the manganese powder investigated.

Very little can be said with regard to the structure of the compound Ag_3Al, which is probably too complex to be solved from a powder photograph alone. It is however clear that neither the 15 silver atoms nor the 5 aluminium atoms can form a group of equivalent points. It thus seems probable that the structure contains at least four independent groups of atoms, two containing silver atoms and two containing aluminium atoms. As an alternative solution, silver and aluminium atoms may be distributed at random throughout the structure; in which case the reason for the exact ratio of silver and aluminium atoms would be that the structure was stable only at a certain concentration of valency electrons *.

The γ-Phase.

This phase is close-packed hexagonal, a type of structure common in alloys. The lattice dimensions change continuously within the homogeneous range. As may be seen from Pl. IV., the interference lines are continuously displaced within this interval, but from 43 atomic per cent. Al and further on they have a constant position. From 43 to 100 atomic per cent. Al the lines of the γ-phase gradually decrease in intensity, while the Al-lines grow stronger as the Al-content rises. The X-ray data for the γ-phase are given in Table II.

The calculated values of the intensity, I, given in the table are deduced from the product of the relative occurrence of the reflecting planes and the square of the structure amplitude. The constants of the quadratic forms—

$\frac{\lambda^2}{3a_1^2}$ and $\frac{\lambda^2}{4a_3^2}$, $-\lambda =$ wave-length, a_1 and a_3 are the lattice parameters—are given in Table III. This also contains the density values, the lattice dimensions, and the calculated number of atoms per elementary parallelepiped.

If the lattice dimensions given in the table be plotted diagrammatically against the concentration values, it is evident that the range of homogeneity of the γ-phase has the limits 27 and 40 atomic per cent. Al.

* Comp. Westgren and Phragmén, *Arkiv för matematik* etc., Stockholm 19 B, No. 12 (1926); *Zeitschr. f. Metallkunde*, xviii, p. 279 (1926).

Table II.

Powder Photograms of the γ-Phase.

I.		Radiation.	$h_1h_2h_3$.	27 at. per cent. Al. $\sin^2\frac{\theta}{2}$.		43 at. per cent. Al. $\sin^2\frac{\theta}{2}$.	
Obs.	Calc.			Obs.	Calc.	Obs.	Calc.
v.w.	...	β	1 0 0	...	...	0·123	0·1237
w.	...	β	0 0 2	...	...	0·1455	0·1470
m.	3	α	1 0 0	...	...	0·1495	0·1502
m.	...	β	1 0 1	...	...	0·1595	0·1604
st.	4	α	0 0 2	...	...	0·178	0·1784
st.	18	α	1 0 1	...	...	0·1945	0·1948
w.	...	β	1 0 2	0·266	0·2668	0·269	0·2707
st.	6	α	1 0 2	0·325	0·3241	0·328	0·3286
v.w.	...	β	1 1 0	0·374	0·3744	0·3695	0·3711
m.	...	β	1 0 3	0·444	0·4443	0·4545	0·4545
st.	12	α	1 1 0	0·455	0·4551	0·4495	0·4506
w.	...	β	1 1 2	0·515	0·5164	0·516	0·5181
v.w.	...	β	2 0 1	0·530	0·5299	0·530	0·5316
st.	18	α_1	1 0 3	0·5395	0·5396	0·5515	0·5517
m.		α_2	1 0 3	0·5415	0·5416	0·5545	0·5544
w.	...	β	0 0 4	0·5675	0·5676	0·5875	0·5874
w.	3	α_1	2 0 0	0·607	0·6068	0·600	0·6004
v.w.		α_2	2 0 0	0·609	0·6092	0·603	0·6032
st.	24	α_1	1 1 2	0·6275	0·6275	0·629	0·6288
m.		α_2	1 1 2	0·6305	0·6299	0·632	0·6318
st.	18	α_1	2 0 1	0·650	0·6499	0·645	0·6453
m.		α_2	2 0 1	0·652	0·6525	0·648	0·6480
m.	4	α_1	0 0 4	0·690	0·6896	0·714	0·7140
w.		α_2	0 0 4	0·6925	0·6922	0·7175	0·7175
m.	6	α_1	2 0 2	0·7795	0·7792	0·7785	0·7789
w.		α_2	2 0 2	0·782	0·7822	0·7815	0·7825
w.	...	β	2 0 3	0·8185	0·8185	0·8245	0·8248
m.	6	α_1	1 0 4	0·841	0·8413	0·863	0·8641
w.		α_2	1 0 4	0·844	0·8445	0·8665	0·8683
w.	...	β	2 1 1	0·9095	0·9091	0·902	0·9019
w.	...	β	1 1 4	0·942	0·9420	0·958	0·9582

There is nothing in the photograms of the γ-phase to indicate that the Ag or the Al atoms are arranged in a regular way. They are evidently distributed quite at random at the points of the close-packed hexagonal lattice, thus forming a solid solution of a very simple structure *. There is consequently no reason to believe that the γ-phase contains an intermetallic compound with a formula such as Ag_2Al or Ag_3Al.

* Comp. Phil. Mag. (6) l. p. 311 (1925).

TABLE III.

Lattice Dimensions and Number of Atoms per Elementary Parallelepiped in the γ-Phase.

Atomic per cent. Al.	Average Atomic Weight.	Density.	$\frac{\lambda^2}{3a_1^2}$.		$\frac{\lambda^2}{4a_3^2}$.		a_1 in Å.	a_3 in Å.	a_3/a_1.	Number of atoms per Elementary Parallelepiped.
			K_{α_1}.	K_β.	K_{α_1}.	K_β.				
27	86·13	8·60	0·1517	0·1248	0·0431	0·0355	2·865	4·653	1·625	2·00
32	82·88	8·33	0·1512	0·1245	0·0436	0·0359	2·869	4·625	1·612	2·01
39	76·18	7·62	0·1504	0·1237	0·0445	0·0366	2·877	4·579	1·592	1·99
43	73·17	7·23	0·1501	0·1236	0·0446	0·0367	2·879	4·573	1·588	

The Phase stable at Higher Temperatures.

According to Petrenko there should be a phase present in the range 15–35 atomic per cent. Al, stable only at higher temperatures. The following observations have confirmed the correctness of this statement.

When specimens of alloys having the said composition were polished and electrolytically etched with nitric acid, a macroscopically visible granular structure was revealed. The size of the grains amounted to several millimetres. X-ray photograms obtained by reflexions against these surfaces showed, however, no single spots, as might have been expected, but continuous lines of a somewhat diffuse appearance, which is a proof that the large grains had been broken up into a very fine structure by some transformation in the solid state.

There are reasons for believing that the phase stable at higher temperatures has a structure analogous to the β-phase of the Cu–Zn-, Ag–Zn-, Au–Zn-, Cu–Al- and Cu–Sn-systems *, *i. e.* a body-centred cubic lattice : but to settle this it must be investigated in a camera designed specially for high temperature work. Attempts to obtain the phase at the ordinary temperature by quenching heated specimens failed.

Summary.

1. An X-ray analysis of the Ag–Al-system has confirmed the statement of Petrenko that it has two intermediate phases at ordinary temperature, both formed through transformation in the solid state.

2. As Petrenko also found, one of them is Ag_3Al. It is cubic, having an elementary cube with an edge of 6·920 Å., containing 20 atoms. *It is isomorphous with β-manganese.*

3. The other intermediate phase, which is homogeneous in a range from 27 to 40 atomic per cent. aluminium, is a solid solution of close-packed hexagonal structure. Its lattice dimensions change continuously from $a_1 = 2{\cdot}865$ Å., $a_3 = 4{\cdot}653$ Å., and $a_3/a_1 = 1{\cdot}625$ when saturated with silver to $a_1 = 2{\cdot}879$ Å., $a_3 = 4{\cdot}573$ Å., and $a_3/a_1 = 1{\cdot}588$ when saturated with aluminium.

One of the authors is indebted to the Royal Commissioners for the Exhibition of 1851, for a Senior Studentship which enabled him to undertake this investigation, which was carried out at the Metallographic Institute, Stockholm.

* Westgren and Phragmén, *loc. cit.* p. 3.

XXVII. *Radio Transmission Formulæ.* *By* G. W. Kenrick, *Sc.D., Moore School of Electrical Engineering, University of Pennsylvania, Pa., U.S.A.**

EARLY studies of the problem of the propagation of electric waves over the surface of the earth considered the problem to be that of determining the field at any point on the surface of an isolated conducting sphere due to an oscillating doublet located at a given point P on its surface †. While these investigations were valuable contributions to theoretical optics, they led to a transmission formula giving an attenuation much greater than that experimentally observed.

The explanation of the departure is, of course, to be found in the important role played by the conductivity of the Kennelly-Heaviside layer.

Much successful work has recently been carried out with a view to explaining the phenomena of short-wave transmission by means of a study of the reflexion and refraction of electric waves by ions and electrons in a magnetic field, but less attention has been given to modifications produced in the classical Hertzian solution for the field at a distant point due to an oscillating doublet when multiple-order reflexions are considered.

G. N. Watson first attacked this problem in 1919 ‡, and obtained a solution for two concentric spherical shells of finite conductivity and sharply-defined boundaries. Dr. Watson's method of attack involved the setting down of Maxwell's equations and an investigation of their solution in terms of series expansions involving spherical or zonal harmonics.

While admirable from the point of view of the mathematician, the method of Watson was too involved to adapt itself to extension to the consideration of the gradually varying conductivity of the upper atmosphere and other related problems of considerable importance in short-wave transmission. For this reason, perhaps, the work of Watson is not frequently referred to by engineers and physicists

* Communicated by Dr. Balth van der Pol.

† H. M. MacDonald, Proc. Roy. Soc. lxxii. pp. 59–68 (1903); xc. pp. 50–61 (1914). G. N. Watson, Proc. Roy. Soc. A, xcv. pp. 83–99 (1918–19). J. W. Nicholson, Phil. Mag. xx. p. 172 (1910). B. van der Pol, Phil. Mag. xxxviii. p. 365 (1919). O. Laporte, *Ann. d. Phys.* lxx. p. 595 (1923).

‡ G. N. Watson, Proc. Roy. Soc. xcv. pp. 546–563 (1919).

working in this field, who have adopted the optical point of view of directly-transmitted and singly- or multiply-reflected or refracted rays in their further studies of this problem.

A modification in the coefficient of the exponential in Austin's formula, suggested by Watson's analysis, has also apparently escaped attention, due, perhaps, to the fact that it is implicitly contained in Watson's expression for the Hertzian function rather than explicitly set down in an expression for the field.

Watson's formula involved physical hypotheses which while far from accurate in the general case, are nevertheless probably adequate to the treatment of long-wave communication, from which Austin's formula was originally derived. It is of interest to note that the results obtained by Watson may also be obtained with slight approximation by an application of the optical point of view of reflected rays.

It will be the purpose of this paper to derive such an expression for the field between two concentric conducting spheres by a direct summation of the reflected waves, and to consider the application of the formula thus derived to the problem of long-distance radio communication.

1. *Review of Classical Solution for the Oscillating Doublet.*

The classical problem of determining the field at a point P due to an electronic charge e vibrating at the origin, with an electric moment $A \sin \omega t$ (see fig. 1), gives for the electric and magnetic field intensities at the point P *

$$E_\theta = -\frac{\sin\theta}{\rho} A\omega^2 \sin\omega\left(t-\frac{\rho}{c}\right), \quad . \quad . \quad . \quad (1)$$

$$E_r = 0, \quad . \quad . \quad . \quad . \quad . \quad . \quad . \quad . \quad . \quad . \quad . \quad . \quad (2)$$

$$H_\phi = -\frac{\sin\theta}{\rho} A\omega^2 \sin\omega\left(t-\frac{\rho}{c}\right). \quad . \quad . \quad . \quad (3)$$

It is not unusual, although not strictly rigorous, to apply this theory to the case of a radio antenna †. Admitting this

* G. W. Pierce, 'Electric Oscillations and Electric Waves,' p. 432 *t seq.* (McGraw Hill, 1920).

† Pierce's computations of radiation resistance for flat-topped loaded antennæ make it possible to correct the results computed on the oscillating doublet theory if such a correction is desired in a particular case. (See text-reference above.)

approximation, we evaluate the constant A in terms of the antenna constants.

Thus we may write, where i is the antenna current in absolute electrostatic units, $2l$ the length of the doublet, e the electronic charge ($2le = \mathrm{A}$),

$$i = \dot{q} = \frac{\mathrm{A}\omega}{2l} \cos \omega \left(t - \frac{\rho}{c}\right). \quad . \quad . \quad . \quad . \quad (4)$$

Fig. 1.

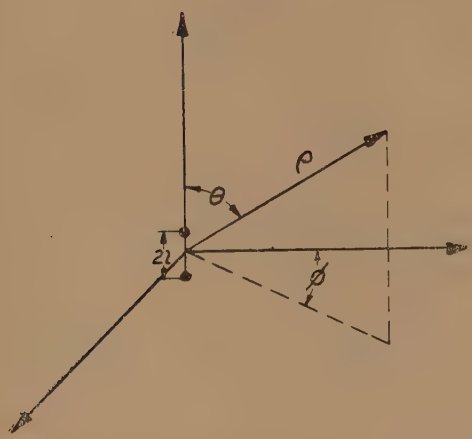

If I represents the maximum amplitude of i, we may write $2l\mathrm{I} = \mathrm{A}\omega$, and hence (with appropriate choice of the axis of t)

$$\mathrm{E}_\theta = -\frac{\sin\theta}{\rho} 2l\mathrm{I}\omega \sin \omega \left(t - \frac{\rho}{c}\right). \quad . \quad . \quad . \quad (5)$$

Noting further that $\omega = \dfrac{2\pi c}{\lambda}$ gives

$$\mathrm{E}_\theta = -\frac{\sin\theta}{\rho} \frac{4\pi c l \mathrm{I}}{\lambda} \sin \omega \left(t - \frac{\rho}{c}\right). \quad . \quad . \quad (6)$$

By the elementary theory of electrostatic images, the field is unaltered by the introduction of a perfectly conducting plane in the horizontal plane $\theta = \frac{\pi}{2}$ (see fig. 1). The solution given in equation (6) is therefore the solution for

the radiation from a doublet antenna of height l located at a point O on a perfectly-conducting plane where all quantities are expressed in absolute electrostatic units. For convenience we will let

$$\frac{4\pi c l \mathrm{I}}{\lambda} = \mathrm{K}. \quad . \quad . \quad . \quad . \quad . \quad . \quad (7)$$

At this point it is of interest to note that, expressed in practical units (amp., km., volts), this value of K gives for E at the surface of the earth

$$\mathrm{E} = \frac{120\pi l \mathrm{I}}{\rho\lambda}, \quad . \quad . \quad . \quad . \quad . \quad . \quad (8)$$

where

E = root mean square field in volts-km.,

I = root mean square antenna current in amp.,

ρ = distance in km.,

λ = wave-length in km.,

l = height of antenna in km.

2. *Propagation of Waves between two Perfectly-conducted Planes.*

We will now alter the conditions of the previous problem by introducing a second perfectly-conducting plane at a height h above the $\theta = \frac{\pi}{2}$ plane of fig. 1 (see fig. 2). We require the field at a point P on the plane $\theta = \frac{\pi}{2}$ due to the doublet at O.

We may obtain this solution directly from optics in terms of a direct and a series of reflected rays, but it is perhaps more satisfactory to formulate the problem from the theory of images; *i. e.*, we require a series of image doublets which will cause the tangential electric field at any point on the bounding planes to vanish. Such an infinite series of doublets is indicated in fig. 2.

The resultant field at the point P is then obtained by taking the sum of the normal components of the electric fields due to each pair of symmetrically-located doublets *

* It will be noted that tangential components of electric force vanish as required.

and summing the components due to all the pairs of doublets. This gives for the resultant normal field at P

$$E_p = K\left[\frac{\sin^2\theta_0 \sin\omega\left(t-\frac{\rho}{c}\right)}{\rho} + 2\sum_{s=1}^{s=\infty}\frac{\sin^2\theta_n \sin\omega\left(t-\frac{\sqrt{\rho^2+4s^2h^2}}{c}\right)}{\sqrt{\rho^2+4s^2h^2}}\right]. \quad (9)$$

Fig. 2.

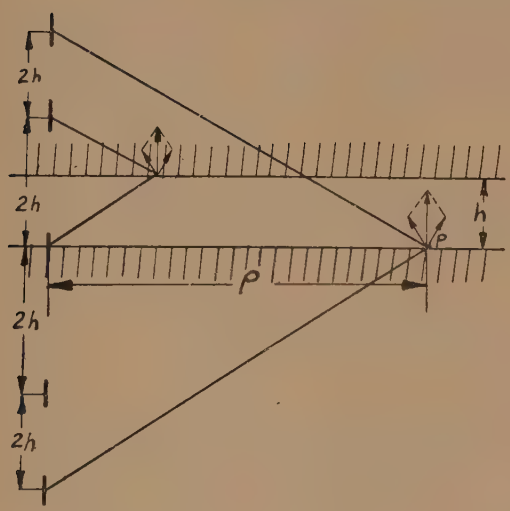

Noting that $\sin^2\theta = \frac{\rho^2}{\rho^2+4s^2h^2}$, this may be written

$$E = K\left[\frac{\sin\omega\left(t-\frac{\rho}{c}\right)}{\rho} + 2\sum_{s=1}^{s=\infty}\frac{\rho^2 \sin\omega\left(t-\sqrt{\rho^2+4s^2h^2}\right)}{\left(\sqrt{\rho^2+4s^2h^2}\right)^{\frac{3}{2}}}\right]. \quad (10)$$

The evaluation of E for small $\frac{\rho}{h}$ may be carried ut by

direct computation, as the terms in this case decrease in magnitude. For $\frac{\rho}{h} > 10$, however, this procedure is evidently laborious.

It may be shown, however, that under these conditions the probability is small that the mean E at any point P chosen at random will depart much from * $\frac{1}{2}\sum_{s=0}^{s=\infty} E_s^2$; *i. e.*,

$$\overline{E}^2 \simeq \tfrac{1}{2}K^2\left(\frac{1}{\rho^2} + 4\sum_{s=1}^{s=\infty}\frac{\rho^4}{(\rho^2+4s^2h^2)^3}\right), \quad . \quad . \quad (11)$$

where the units employed are absolute electrostatic units and K is as defined in equation (7).

We will now proceed to some purely mathematical manipulation which may be used to sum this infinite series. We begin by availing ourselves of the well-known identity obtained from product considerations †, *i. e.*,

$$\coth x = \frac{1}{x} + 2\sum_{s=1}^{s=\infty}\frac{x}{x^2+s^2\pi^2}. \quad . \quad . \quad . \quad (12)$$

Changing variable, letting $\frac{\pi y}{2h} = x$, gives

$$\coth\frac{\pi y}{2h} = \frac{2h}{\pi y} + 2\sum_{s=1}^{s=\infty}\frac{\frac{\pi y}{2h}}{\frac{\pi^2 y^2}{4h^2}+s^2\pi^2}. \quad . \quad . \quad (13)$$

or

$$\frac{\pi}{4yh}\left(\coth\frac{\pi y}{2h} - \frac{2h}{\pi y}\right) = \sum_{s=1}^{s=\infty}\frac{1}{y^2+4s^2h^2}. \quad . \quad . \quad (14)$$

Letting $y = \sqrt{x}$, we have

$$\frac{\pi}{4h\sqrt{x}}\left(\coth\frac{\pi\sqrt{x}}{2h}\right) - \frac{1}{2x} - \sum_{s=1}^{s=\infty}\frac{1}{x+4s^2h^2}. \quad . \quad (15)$$

Differentiating both sides of this identity with respect to x gives

$$\frac{\pi}{8h(\sqrt{x})^3}\coth\frac{\pi\sqrt{x}}{2h}$$
$$+ \frac{\pi^2}{16h^2x}\operatorname{csch}^2\frac{\pi\sqrt{x}}{2h} - \frac{1}{2x^2} = \sum_{s=1}^{s=\infty}\frac{1}{(x+4s^2h^2)^2}. \quad (16)$$

* This, in the optical analogy, amounts to taking the resultant intensity of the light as the sum of its component intensities.

† See E. B. Wilson's 'Advanced Calculus,' p. 454.

Differentiating again, we have

$$\frac{3\pi}{16h(\sqrt{x})^5}\coth\frac{\pi\sqrt{x}}{2h}+\frac{3\pi^2\operatorname{csch}^2\frac{\pi\sqrt{x}}{2h}}{32h^2x^2}$$

$$+\frac{\pi^3}{32h^3(\sqrt{x})}\left(\operatorname{csch}^2\frac{\pi\sqrt{x}}{2h}\right)\left(\coth\frac{\pi\sqrt{x}}{2h}\right)-\frac{1}{x^2}$$

$$=\sum_{s=1}^{s=\infty}\frac{2}{(x+4s^2h^2)^3}. \quad (17)$$

If, now, we multiply both sides of this equation by $2K^2x^2$, set $x=\rho^2$, reverse the order of the members, and subtract $\frac{K^2}{\rho^2}$ from each side of the resulting equation, we have our required summation; *i.e.*,

$$K^2\left(\frac{1}{\rho^2}+\sum_{s=1}^{s=\infty}\frac{4\rho^4}{(\rho^2+4s^2h^2)^3}\right)$$

$$=K^2\left(\frac{3\pi}{8h\rho}\coth\frac{\pi\rho}{2h}+\frac{3\pi^2\operatorname{csch}^2\frac{\pi\rho}{2h}}{16h^2}\right.$$

$$\left.+\frac{\pi^3\rho}{16h^3}\left(\operatorname{csch}^2\frac{\pi\rho}{2h}\right)\left(\coth\frac{\pi\rho}{2h}\right)-\frac{1}{\rho^2}\right). \quad (18)$$

Substituting the value of K from equation (8), we may write for the root mean square field E, in practical units,

$$E=\frac{120\pi lI}{\lambda}\left[\frac{3\pi}{8h\rho}\coth\frac{\pi\rho}{2h}+\frac{3\pi^2\operatorname{csch}^2\frac{\pi\rho}{2h}}{16h^2}\right.$$

$$\left.+\frac{\pi^3\rho}{16h^3}\left(\operatorname{csch}^2\frac{\pi\rho}{2h}\right)\left(\coth\frac{\pi\rho}{2h}\right)-\frac{1}{\rho^2}\right]^{\frac{1}{2}}, \quad (19)$$

where h is the height of the Kennelly-Heaviside layer in kilometres and the other quantities are in the same units as in equation (8).

For $\frac{\rho}{h}\ll 1$ this equation becomes identical with equation (8), and represents an E inversely proportional to ρ. This is, of course, as it should be, as reflected waves will not be of importance at distances from the transmitter very small compared with h.

For $\frac{\rho}{h} >> 1$, however, the term $\frac{3\pi}{8h\rho} \coth \frac{\pi\rho}{2h}$ governs, and the value of E given by the formula approaches

$$E = \frac{120\pi l I}{\lambda} \sqrt{\frac{3\pi}{8h\rho}}.$$

In other words, E decreases only with $\frac{1}{\sqrt{\rho}}$ in this case.

3. *Correction for Earth Curvature.*

In the previous analysis we have found intensity at any point at a distance ρ from an oscillating doublet located at

Fig. 3.

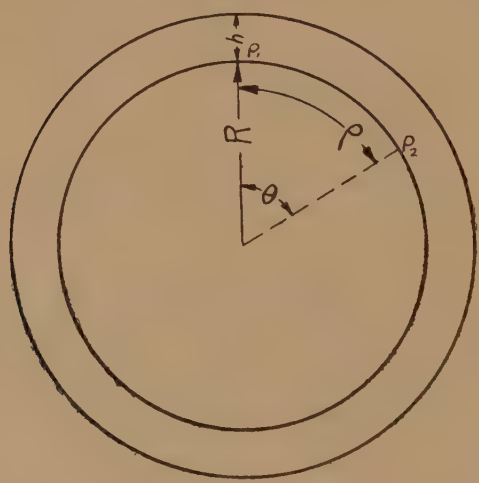

the surface of one of two perfectly-conducting planes. This analysis may, with slight approximation, be extended to the case of two concentric conducting spheres separated by a distance small compared with their radii.

Thus, referring to fig. 3, showing two concentric conducting spheres, we require the intensity of the electric field E normal to the innner sphere at its surfaces at a point P_2 at a distance ρ from an oscillating doublet located at point P_1 on the surface of the inner sphere. If R is approximately 6400 km. and $h = 100$ km., we may, to a very good approximation, neglect the curvature of the great circle in computing the paths of the rays, thus reducing the problem to much the same form as in the plane case.

It does not follow, however, that we may likewise neglect the curvature of the small circles $R \sin\theta$ or $(R+h)\sin\theta$ on the surfaces of the inner and outer spheres respectively. This results in a focussing action in which the energy flowing out from the emitting doublet passes out, at a distance ρ from the doublet, through an area $2\pi R \sin\theta$ as contrasted with an area* $2\pi R\theta$ in the plane case. Now, the total energy passing through these surfaces† must, in the absence of attenuation ‡, be equal to the total emitted energy of the doublet. It follows, therefore, that for a given ρ, if E_s^2 and E_p^2 are the squares of the field intensities in the sphere and plane cases respectively, we have, with slight approximation §,

$$\frac{E_s^2}{E_p^2} = \frac{2\pi\rho h}{2\pi R h \sin\theta} = \frac{\rho}{R\sin\theta} = \frac{\theta}{\sin\theta}.$$

Hence the formula for the mean square field E becomes in this case

$$E_s = \frac{120\pi l I}{\lambda}\sqrt{\frac{\theta}{\sin\theta}}\left[\frac{3\pi}{8h\rho}\coth\frac{\pi\rho}{2h} + \frac{3\pi^2\operatorname{csch}^2\frac{\pi\rho}{2h}}{16h^2} + \frac{\pi^3\rho}{16h^3}\left(\operatorname{csch}^2\frac{\pi\rho}{2h}\right)\left(\coth\frac{\pi\rho}{2h}\right) - \frac{1}{\rho^2}\right]^{\frac{1}{2}}$$

[km., amp., volts, radians]. (21)

For this $\frac{\rho}{h} \ll 1$ reduces to

$$\frac{120\pi l I}{\lambda\rho}\sqrt{\frac{\theta}{\sin\theta}} \quad . \quad . \quad . \quad . \quad . \quad . \quad (22)$$

Equation (22) is readily recognized as the coefficient of Dr. Austin's transmission formula. Our analysis indicates

* Neglecting higher-order terms in $\frac{h}{R}$.

† We do not consider waves passing around the sphere more than once. These are not of practical interest, owing to attenuation.

‡ In cases of attenuation factors involving ρ only, this argument is still valid, as the same fraction of initial energy reaches the surface at a distance ρ.

§ Our approximation consists in neglecting certain phase differences; *i. e.*, we assume that $\int_s ExH \,.\, ds \sim E^2$ (area). At considerable distances from the transmitter, however, our wave is nearly plane, and this approximation is not seriously in error.

that when reflexions are considered, a more appropriate form of the coefficient for $\frac{\rho}{h}$ large would be

$$\frac{10\ \pi l \mathrm{I}}{\lambda}\sqrt{\frac{3\pi\theta}{8\rho h \sin\theta}} \quad . \quad . \quad . \quad . \quad . \quad (23)$$

Figs. 4 and 5 give plots of E as computed from equations (22), (23), and (11) * for the case $120\pi l\mathrm{I}=10^4$ (a constant determined at the transmitting station), $h=100$ km. The

Fig. 4.

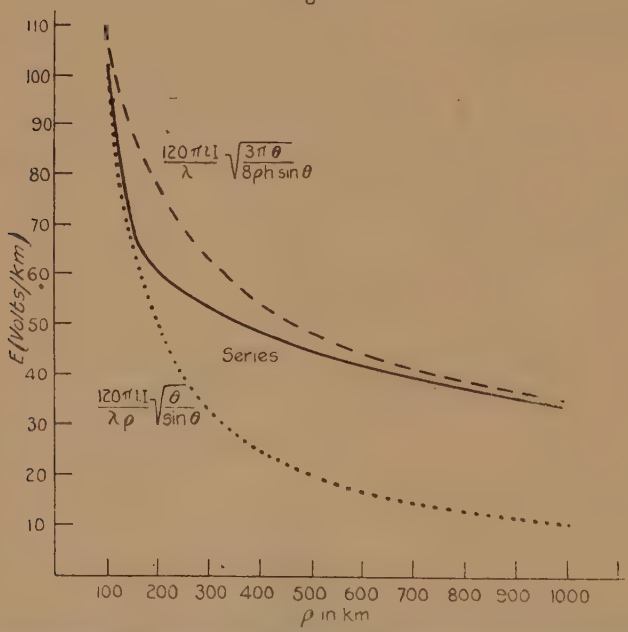

Comparison of transmission formulæ for infinite conductivity case (ρ small).

interval $\rho=100$ to $\rho=1000$ km. is shown in fig. 4, and the interval $\rho=1000$ to 20,000 km. is shown in fig. 5. For values of $\rho<100$ (11) corresponds closely to (22), and for values of $\rho>10{,}000$ to (23).

* Equation (11) must, of course, be modified to take account of earth curvature, and reduced to comparable practical units. This gives for E,

$$\mathrm{E}=\frac{120\pi l\mathrm{I}}{\lambda}\sqrt{\frac{\theta}{\sin\theta}}\left(\frac{1}{\rho^2}+4\sum_{s=1}^{s=\infty}\frac{\rho^4}{(\rho^2+4s^3h^2)^3}\right)^{\frac{1}{2}} \quad . \quad . \quad (11\,b)$$

4. *Modifications introduced by Finite Conductivity.*

Thus far we have considered the propagation of waves between two perfectly-conducting sharply-defined planes or concentric spheres. It is not, however, difficult to modify equation (11) in such a manner as approximately to take into account attenuation due to finite conductivity and a non-sharply defined boundary at the upper conducting layer.

Fig. 5.

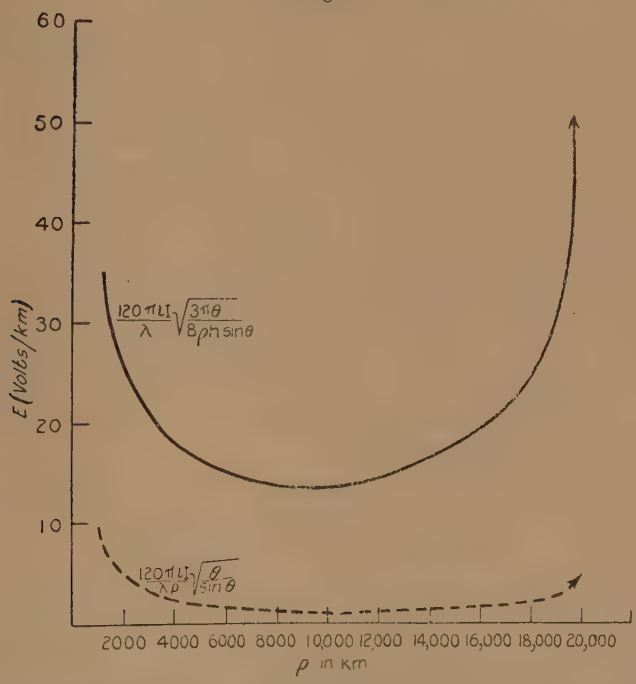

Comparison of transmission formulæ for infinite conductivity case (ρ large).

However, the problem of the series thereby introduced is not in general as simple as in the infinite conductivity case.

Thus, in the formulation of § 2, if we still consider the lower plane (corresponding to the earth) as perfectly conducting, and let r_s be the reflexion (or refraction) coefficient of a ray incident on the upper plane at an angle of incidence ϕ_s, we have, for the plane case,

$$E^2 = \tfrac{1}{2}K^2\left(\frac{1}{\rho^2} + 4\sum_{s=1}^{s=\infty}\frac{\rho^4 r_s^s}{(\rho^2+4s^2h^2)^3}\right). \quad . \quad (24\,a)$$

It will be noted that § 2 was not limited in its application to long-distance long-wave communications. The approximations of § 3 *et seq.*, however, need further investigation and modification before the above methods can be used to deduce a transmission formula applicable for short-wave communication over short or moderate distances. It will in particular be noted that the form of the reflexion coefficient of equation (24) distinctly does not hold under these considerations, although the possibility remains of employing a suitably-modified coefficient of reflexion, taking into account the non-metallic nature of the reflector and non-sharply defined boundary.

Another correction of importance when transmission over short or moderate distances is considered arises in connexion with the correction for earth curvature. Due to the shadow effect of the earth, according to our approximate treatment, the directly-transmitted wave (and, at sufficiently great distances, lower-order reflexions) would be suppressed. At long distances the effect of these terms is relatively unimportant. At short distances a term for term computation of equation (24) is possible. If, as an approximation, we modify the small directly-transmitted wave-term to the form it assumes in the MacDonald-Watson diffraction solution for the earth as an isolated conducting sphere, equation (24), modified further to take account of earth curvature in the reflexion terms, becomes *

$$E^2 = \frac{\theta}{\sin\theta} K^2 \left(\frac{A}{\rho} \epsilon^{-\frac{0\cdot0075\rho}{\sqrt[3]{\lambda}}} + \sum_{s=1}^{s=\infty} \frac{\rho^4 r_s^s}{(\rho^2 + 4s^2h^2)^3} \right). \qquad (24\,b)$$

The complete theory of the determination of the quantity r as a function ϕ_s, the thickness of the conducting boundary, and the frequency involves the entire problem of the wave-length attenuation function of radio transmission, a discussion beyond the scope of the present article.

It is of interest, however, to note that, on the assumption of an ohmic conductivity and a sharply-defined boundary †, the reflexion coefficient may be approximately written in exponential form.

From usual optical theory we have, for a wave with its

* See reference † of page 289. Watson concludes that for this case the Hertzian function is of the order of $A(\sin\theta)^{-\frac{1}{2}}\epsilon^{-23\cdot946\lambda^{-\frac{1}{3}}}$, which in our notation is given above. A is a constant.

† A boundary may be considered as sharply defined, provided reflexion takes place in an interval small compared with a wave-length.

electric intensity vector in the plane of incidence, a reflexion coefficient given by *

$$\sqrt{r_s} = \frac{n^2 \cos \phi_s - \sqrt{n^2 - \sin^2 \phi_s}}{n^2 \cos \phi_s + \sqrt{n^2 - \sin^2 \phi_s}}, \quad . \quad . \quad (25)$$

where

n = the relative index of refraction of the media ;

ϕ_s = angle of incidence.

For a large index of refraction n and a correspondingly large $\sqrt{r}$ this may conveniently be written, by ordinary algebraic division, in the form

$$\sqrt{r_s} = \frac{1 - \dfrac{\sqrt{n^2 - \sin \phi_s}}{n^2 \cos \phi_s}}{1 + \dfrac{\sqrt{n^2 - \sin^2 \phi_s}}{n^2 \cos \phi_s}}$$

$$= 1 - \frac{2\sqrt{1 - \dfrac{\sin^2 \phi_s}{n^2}}}{n \cos \phi_s} + \frac{2\left(1 - \dfrac{\sin^2 \phi_s}{n^2}\right)}{n^2 \cos^2 \phi_s} + \ldots \quad (26)$$

or to higher-order terms in $\frac{1}{n}$,

$$\sqrt{r_s} \simeq \epsilon^{-\frac{2}{n \cos \phi_s}} \quad . \quad . \quad . \quad . \quad . \quad . \quad (27)$$

For $\mu_1 = 1$, $\epsilon_1 = 1$, $\mu_2 = 1$ and a reflecting medium of specific conductivity γ, n becomes, for a wave of period T,

$$n = \sqrt{\epsilon_2 + 2\sqrt{-1}\,\gamma \mathrm{T}}. \quad . \quad . \quad . \quad . \quad (28)$$

For γ large, we have

$$n \simeq \sqrt{2\gamma \mathrm{T}}\,\underline{/45^\circ} \quad . \quad . \quad . \quad . \quad . \quad . \quad (29)$$

and

$$|\sqrt{r_s}| \simeq \epsilon^{-\frac{1}{\sqrt{\gamma \mathrm{T}} \cos \phi_s}}. \quad . \quad . \quad . \quad . \quad (30)$$

Substituting equation (30) in (24 a), we have, for the plane case, noting that $\cos \phi_s = \dfrac{2sh}{\sqrt{\rho^2 + 4s^2h^2}}$,

$$\overline{\mathrm{E}}^2 = \tfrac{1}{2}\mathrm{K}^2 \left(\frac{1}{\rho^2} + 4 \sum_{s=1}^{s=\infty} \frac{\rho^4 \epsilon^{-\frac{\sqrt{\rho^2 + 4s^2h^2}}{h\sqrt{\gamma \mathrm{T}}}}}{(\rho^2 + 4s^2h^2)^3} \right), \quad . \quad (31\,a)$$

* P. Drude's 'Theory of Optics' (Longmans, Green & Co., 1920). G. W. Pierce, 'Electric Oscillations and Electric Waves.'

and from (24 *b*), for the case of the earth as a sphere,

$$\overline{E}^2 = \frac{\theta}{\sin\theta}\tfrac{1}{2}K^2\left(\frac{A}{\rho}\epsilon^{-\frac{0\cdot0075\rho}{\sqrt{\lambda}}} + 4\sum_{s=1}^{s=\infty}\frac{\rho^4\epsilon^{-\frac{\sqrt{\rho^2+4s^2h^2}}{h\sqrt{\gamma T}}\rho}}{(\rho^2+4s^2h^2)^3}\right). \quad (31b)$$

It is of interest to note that in equation (31) the attenuation factor of every term (except that for the ground-wave) involves the inverse square root of the wave-length. For lower-order reflexions and ρ large, moreover, $\sqrt{\rho^2+4s^2h^2} \simeq \rho$, making this approximation for the series as a whole, the corresponding value of E for the plane case reduces at large distances, in the units of equation (18) (γ measured in mhos./km.^{3}), to

$$E = \frac{120\pi lI}{\lambda}\sqrt{\frac{3\pi}{8\rho h}}\,\epsilon^{-\frac{0\cdot183\rho}{h\sqrt{\gamma\lambda}}} \quad . \quad . \quad . \quad . \quad (32)$$

Considerations of earth curvature are not essentially altered by the finite conductivity, since the exponential factor of attenuation is the same in both cases for equal values of ρ. With earth curvature taken into account, (32) becomes

$$E = \frac{120\pi lI}{\lambda}\sqrt{\frac{3\pi\theta}{8\rho h\sin\theta}}\,\epsilon^{-\frac{0\cdot183\rho}{h\sqrt{\lambda}\sqrt{\gamma}}} \quad . \quad . \quad . \quad (33)$$

Taking $h = 100$ km. (effective height), an exponent of the order of 0·0015 is obtained for a γ of the order of about one-thousandth that of sea-water, certainly not an extravagant assumption for the upper-atmosphere conductivity.

5. *Summary of Results and Conclusions.*

It thus appears that, under the hypothesis of reflexion of the metallic type, an assumption quite possibly justified at long wave-lengths, the inverse square root of the wave-length in the attenuation factor of the original Austin formula has considerable theoretical justification. This theory, however, suggests the desirability of a modification of the inverse first power of the distance in the coefficient of the exponential to an inverse square root. A slight change in the numerical constant in this coefficient is also indicated.

The writer has not the data at hand, nor is it within the scope of this paper, to enter into an elaborate statistical comparison of the closeness of accord with experimental data

obtained by this formula, the original Austin formula, and a modification recently suggested by Dr. Austin. It will be noted, however, that the above formula gives much larger values than the Austin at large distances where fields predicted by the Austin formula have in general been found to be too

Fig. 6.

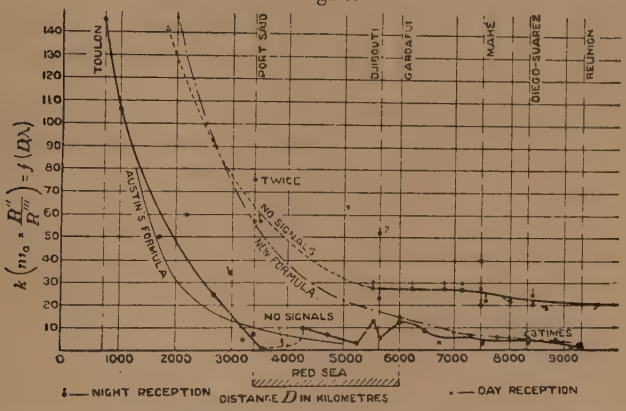

Curves of received signal strengths between Toulon and Réunion. Transmission from Nantes on 9000 m.

Fig. 7.

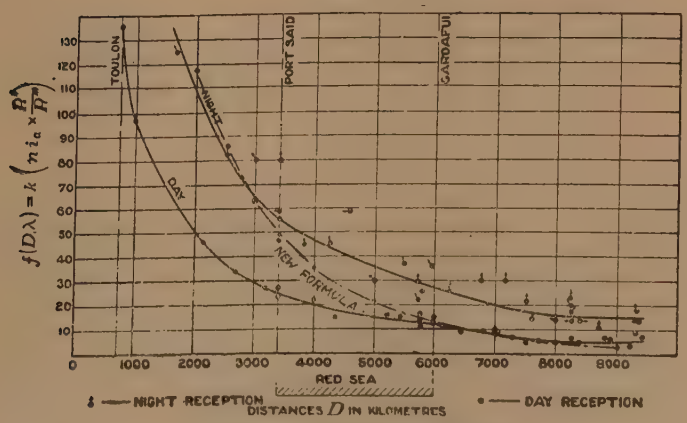

11,000 metre transmission (Lyons).

small to check with observed results. Some idea of the relative values of the fields predicted may be obtained from figs. 4 and 5, which plot the coefficients. Let us compare the formula with at least one piece of experimental data, however. Figs. 6, 7, and 8 show plots of some of the data

taken on the cruise of the 'Aldebaran' to the Antipodes *. The results obtained from the modified formula are plotted in the broken curves; the remaining curves are reproduced exactly as they appear in figs. 4 and 5 of the original article. The absolute scale of these curves does not seem to be available. The broken curves were obtained by multiplying the curve for the Austin formula plotted in fig. 4 of the original article by the ratio of the coefficient of the two formulæ obtained from this paper (see, for instance, figs. 4 and 5).

It will be noted that the accord of our formula is distinctly better than that of the original,. There is, of course, no

Fig. 8.

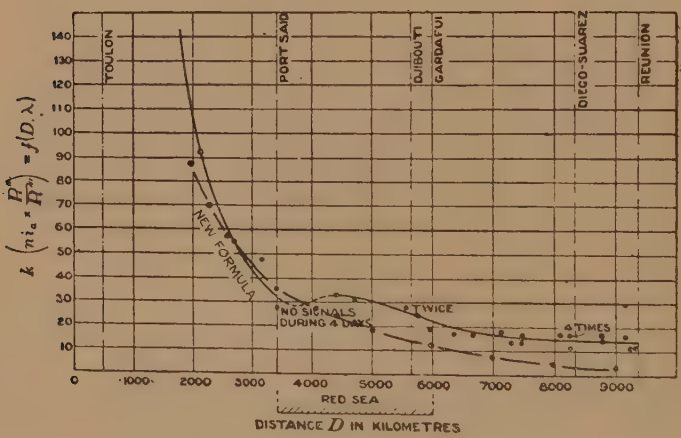

15,000 metre transmission (Lyons).

theoretical reason why the factor 0·0015 in the exponential term should not be subject to modification, and it seems indeed probable that the conductivity of the upper atmosphere is subject to daily and yearly variations. The results of this study indicate the desirability from a theoretical standpoint of seeking modifications in this constant and as indicated in the coefficient rather than in the power to which the wave-length appears in the exponent of the exponential, at least when long-distance long-wave transmission is under investigation.

* "Explorations Hertziennes entre Toulon et Tahiti," *Guierre Comptes Rendu de la Société Français des Electriciens*, pp. 247–268 (1920).

XXVIII. *Steady Flow of Heat in a Rectangular Parallelepiped.* By E. W. Chivers, *B.Sc., East London College* *.

WHILE considering a new method for determining Thermal Conductivities of Rocks, the necessity arose for the solution of the problem of the flow of heat in a rectangular prism heated at the top surface, and cooled to a fixed temperature at the lower surface, the other faces radiating heat to the surrounding air kept at the same fixed temperature. In Fourier's 'Theory of Heat' † the problem is treated in a simplified form, the prism considered being infinite in length. Carslaw deals with the problem in its

Fig. 1.

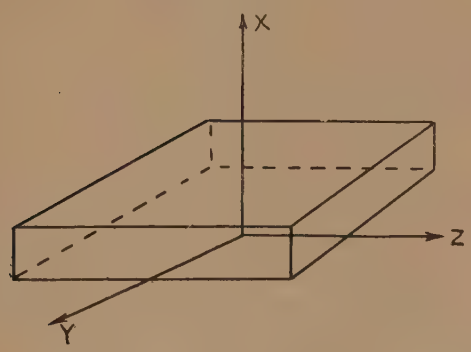

most general form, but arrives at a solution, which, as he says, does not lend itself to numerical calculation, and is not suitable for the evaluation of the thermal constants ‡.

Accepting Carslaw's proof that the temperature may be expressed as a Fourier series, the problem of finding the coefficients of the terms of the series may be conveniently solved by the following method suggested by Prof. Lees.

Consider a prism bounded by the planes

$$\begin{cases} x=0\,; & x=b, \\ y=-a\,; & y=+a, \\ z=-a\,; & z=+a. \end{cases}$$

* Communicated by Prof. C. H. Lees.

† Fourier, 'Theory of Heat' (Freeman's translation), p. 311.

‡ Carslaw, 'Fourier Series and Integrals,' p. 307.

Suppose the surface $x=b$ is kept hot at a constant temperature V.

Suppose the surface $x=0$ is kept cold at zero temperature.

Then if v is the temperature at any point (x, y, z) within the prism,

$$\frac{\partial^2 v}{\partial x^2}+\frac{\partial^2 v}{\partial y^2}+\frac{\partial^2 v}{\partial z^2}=0. \quad . \quad . \quad . \quad . \quad . \quad . \quad (1)$$

Boundary conditions are:

$$\begin{cases} x=0\,; & v=0. \quad . \quad . \quad . \quad . \quad . \quad . \quad . \quad . \quad (a) \\ x=b\,; & v=\mathrm{V} \quad . \quad . \quad . \quad . \quad . \quad . \quad . \quad . \quad (b) \\ y=\pm a\,; & -\mathrm{K}\,.\,\dfrac{\partial v}{\partial y}=hv \quad . \quad . \quad . \quad . \quad . \quad (c) \\ z=\pm a\,; & -\mathrm{K}\,.\,\dfrac{\partial v}{\partial z}=hv \quad . \quad . \quad . \quad . \quad . \quad (d) \end{cases}$$

where K = thermal conductivity of substance,

and h = emissivity of substance.

Assume a solution of equation (1) of the form

$$v=ae^{-m(x-b)}\cos ny\cos pz.$$

Differentiating and substituting in (1),

$$m^2=n^2+p^2$$

$$m=\pm\sqrt{n^2+p^2}.$$

Applying boundary conditions (c) and (d) we have

$$-n\sin ny+\frac{h}{\mathrm{K}}\cos ny=0 \text{ when } y=-a \text{ or } +a,$$

$$-p\sin pz+\frac{h}{\mathrm{K}}\cos pz=0 \text{ when } z=-a \text{ or } +a,$$

i. e., $$\frac{ha}{\mathrm{K}}=na\tan na \text{ and } \frac{ha}{\mathrm{K}}=pa\tan na. \quad . \quad . \quad . \quad (2)$$

If now we put $\epsilon=na$ or pa, ϵ is given by the equation

$$\frac{ha}{\mathrm{K}}=\epsilon\tan\epsilon.$$

This equation admits of an infinite number of solutions. Denoting these by ϵ_1, ϵ_2, ϵ_3, etc., we have values of n and p satisfying (2) infinite in number and given by

$$\frac{\epsilon_1}{a},\ \frac{\epsilon_2}{a},\ \frac{\epsilon_3}{a}\ldots, \text{ etc.}$$

Denote these by n_1, n_2, n_3, etc.

Hence the general value of v is given by:

$$v = \sum_{n_2}\left(\sum_{n_1} a_1 e^{\pm\sqrt{n_1^2+n_2^2}.(x-b)} . \cos n_1 y\right)\cos n_2 z.$$

In this particular case we have at $x=0$, $v=0$, hence

$$v = \sum_{n_2}\left(\sum_{n_1} a_1 . \frac{\sinh\sqrt{n_1^2+n_2^2}.x}{\sinh\sqrt{n_1^2+n_2^2}.b} . \cos n_1 y\right)\cos n_2 z,$$

or

$$\begin{aligned} v = {} & a_{11}\frac{\sinh\sqrt{n_1^2+n_1^2}.x}{\sinh\sqrt{n_1^2+n_1^2}.b} . \cos n_1 y \cos n_1 z \\ & + a_{12}\frac{\sinh\sqrt{n_1^2+n_2^2}.x}{\sinh\sqrt{n_1^2+n_2^2}.b} . \cos n_1 y \cos n_2 z \\ & + a_{21}\frac{\sinh\sqrt{n_1^2+n_2^2}.x}{\sinh\sqrt{n_1^2+n_2^2}.b} . \cos n_2 y \cos n_1 z \\ & + a_{22}\frac{\sinh\sqrt{n_2^2+n_2^2}.x}{\sinh\sqrt{n_2^2+n_2^2}.b} . \cos n_2 y \cos n_2 z \\ & + \ldots, \text{ etc.} \end{aligned}$$

By symmetry $a_{12} = a_{21}$.

At $x=b$, $v=$ constant temperature V.

$$\begin{aligned} \therefore\ V = {} & a_{11}\cos n_1 y \cos n_1 z + a_{12}(\cos n_1 y \cos n_2 z + \cos n_2 y \cos n_1 z) \\ & + a_{22}\cos n_2 y \cos n_2 z + \ldots \\ & \ldots + a_{pp}\cos n_p . y \cos n_p . z + a_{pq}(\cos n_p y \cos n_q z \\ & + \cos n_q y \cos n_p z) + a_{qq}\cos n_q y \cos n_q z + \ldots \end{aligned}$$

To determine the coefficients a_{11}, a_{12}, a_{21}, ... *etc.*

To find the general coefficient a_{pq} multiply both sides of equation by $\cos n_p . y . dy$, and integrate from $-a$ to $+a$.

On left-hand side we have:

$$V\int_{-a}^{+a}\cos n_p . y . dy.$$

On right-hand side we have a series of terms involving an integral of the form

$$\int_{-a}^{+a}\cos ny \cos vy . dy,$$

together with two other terms, viz.,

$$a_{pp}\int_{-a}^{+a}\cos^2 n_p y\,.\,dy\cos n_p z + a_{pq}\int_{-a}^{+a}\cos^2 n_p y\,.\,dy\cos n_q z.$$

Now

$$\int_{-a}^{+a}\cos ny\cos \nu y\,.\,dy = \int_0^a \cos(n-\nu)y\,.\,dy + \int_0^a \cos(n+\nu)y\,.\,dy$$

$$= \left|\frac{1}{n-\nu}.\sin(n-\nu)y + \frac{1}{n+\nu}\sin(n+\nu)y\right|_0^a$$

$$= \frac{1}{2}\left\{\frac{(n+\nu)\sin(n-\nu)a + (n-\nu)\sin(n+\nu)a}{n^2-\nu^2}\right\}.$$

But every value of n satisfies

$$n\tan na = \frac{ha}{\mathrm{K}}.$$

$$\therefore \qquad n\tan na = \nu\tan \nu a.$$

$$\therefore \qquad n\sin na\cos \nu a - \nu\sin \nu a\cos na = 0.$$

Thus the foregoing integral, which reduces to

$$\frac{1}{n^2-\nu^2}(n\sin na\cos \nu a - \nu\sin \nu a\cos na)$$

is zero except in the case when $n=\nu$.

$$\therefore \quad \mathrm{V}\int_{-a}^{+a}\cos n_p y\,.\,dy = a_{pp}\int_{-a}^{+a}\cos^2 n_p y\,.\,dy\cos n_p z$$
$$+ a_{pq}\int_{-a}^{+a}\cos^2 n_p y\,.\,dy\cos n_q z.$$

Multiply both sides by $\cos n_q\,.\,z\,.\,dz$, and integrate as before, then

$$\mathrm{V}\int_{-a}^{+a}\cos n_p y\,.\,dy\int_{-a}^{+a}\cos n_q z\,.\,dz = a_{pq}\int_{-a}^{+a}\cos^2 n_p y\,.\,dy$$
$$+ a_{pp}\int_{-a}^{+a}\cos^2 n_p y\,.\,dy\int_{-a}^{+a}\cos n_p z\cos n_q z\,.\,dz.$$

Second integral zero on integration.

$$\therefore \quad 4\mathrm{V}\int_0^a \cos n_p y\,.\,dy\int_0^a \cos n_q z\,.\,dz$$
$$= a_{pq}\int_0^a (1+\cos 2n_p\,.\,y)dy\int_0^a (1+\cos 2n_q z)dz,$$

$$4\,.\,\mathrm{V}\cdot\frac{\sin n_p a}{n_p},\frac{\sin n_q a}{n_q} = a_{pq}\left(a+\frac{\sin 2n_p a}{2n_p}\right)\left(a+\frac{\sin 2n_q a}{2n_q}\right).$$

$$\therefore\ a_{pq}=4\mathrm{V}\,.\left(\frac{\dfrac{\sin n_p a}{n_p}}{1+\dfrac{\sin 2n_p a}{2n_p}}\cdot\frac{\dfrac{\sin n_q a}{n_q}}{1+\dfrac{\sin 2n_q a}{2n_q}}\right)=4\mathrm{V}\,.\,\mathrm{N}_p\mathrm{N}_q.$$

Hence
$$\begin{cases} a_{11}=4\,.\,\mathrm{V}\mathrm{N}_1^2, \\ a_{12}=4\,.\,\mathrm{V}\,.\,\mathrm{N}_1\mathrm{N}_2, \\ a_{22}=4\mathrm{V}\,.\,\mathrm{N}_2^2. \end{cases}$$

Substituting for constants in general expression for v:

$$v=4\,.\,\mathrm{V}\left\{\mathrm{N}_1^2\frac{\sinh\sqrt{n_1^2+n_1^2}\,.\,x}{\sinh\sqrt{n_1^2+n_1^2}\,.\,b}\cos n_1y\cos n_1z\right.$$

$$+\mathrm{N}_1\mathrm{N}_2\left(\frac{\sinh\sqrt{n_1^2+n_2^2}\,.\,x}{\sinh\sqrt{n_1^2+n_2^2}\,.\,b}\cos n_1y\cos n_2z+\cos n_2y\cos n_1z\right).$$

$$\left.+\mathrm{N}_2^2\frac{\sinh\sqrt{n_2^2+n_2^2}\,.\,x}{\sinh\sqrt{n_2^2+n_2^2}\,.\,b}\cos n_2y\cos n_2z+\ \ldots\ \text{etc.}\right\}.$$

where n_1, n_2 . . . etc., are the roots of the equation

$$n\tan na=\frac{h}{\mathrm{K}}.$$

The solution of this equation is most simply performed by obtaining an approximate solution by means of a graph and then solving more accurately by "trial and error."

E. g. Suppose specimen is of granite:

$$a=2{\cdot}5\text{ cm.}\qquad b=2{\cdot}5\text{ cm.}$$

$$h=0{\cdot}0003.\qquad \mathrm{K}=0{\cdot}006.$$

$$na\tan na=0{\cdot}125.$$

Solving and substituting we have:

$$v=\mathrm{V}\left\{1{\cdot}0404\frac{\sinh\sqrt{n_1^2+n_1^2}\,.\,x}{\sinh\sqrt{n_1^2+n_1^2}\,.\,b}\cos n_1y\cos n_1z\right.$$

$$-0{\cdot}02487\frac{\sinh\sqrt{n_1^2+n_2^2}\,.\,x}{\sinh\sqrt{n_1^2+n_2^2}\,.\,b}(\cos n_1y\cos n_2z+\cos n_2y\cos n_1z)$$

$$\left.+0{\cdot}000595\frac{\sinh\sqrt{n_2^2+n_2^2}\,.\,x}{\sinh\sqrt{n_2^2+n_2^2}\,.\,b}\cos n_2y\cos n_2z+\ \ldots\ \text{etc.}\right\},$$

the coefficients all being expanded numerically.

XXIX. *Anti-Stokes Radiation of Fluorescent Liquids.* *By* R. W. Wood*.

[Plate V.]

EXCEPTIONS to Stokes's law in the case of the fluorescing vapours of sodium, iodine, and other elements are the rule, as has been shown in numerous previous papers.

In the case of solutions of organic dyes it is less easy to show the phenomenon; in fact its existence was a matter of dispute for nearly a quarter of a century. The very careful photometric work of Nichols and Merritt established its existence, but the observations appear to have been extremely difficult, and so far as I know no photographs have ever been published showing the presence of anti-Stokes radiations in the case of solutions.

In preparing an article on fluorescence for the new edition of the Encyclopædia Britannica it appeared to be of interest to secure photographs establishing the reality of the phenomenon, and I was surprised at the ease with which results were secured.

A very dilute solution of fluorescein (alkali-salt), rendered slightly turbid with a precipitate of silver chloride, was illuminated in a square bottle with the beam of light issuing from the slit of a two-prism monochromator. The function of the silver chloride was to scatter a small portion of the monochromatic light so that the narrow spectrum band of the illuminating beam would appear superposed on the fluorescent spectrum. The slit of the prism spectrograph faced the fluorescent track from the side.

With blue light excitation the fluorescence was very bright and an exposure of half a minute was sufficient. A sodium flame was then placed behind the bottle for a few seconds for the purpose of securing a reference mark on the spectrogram. The result of this exposure is reproduced on Pl. V. fig. *a*, the exciting monochromatic band scattered by the silver chloride is at the left, while the D lines are at the right, the green fluorescent spectrum lying between the two. In figs. *b* and *c* the exciting band has moved up into the region of fluorescence, and the spectrum is seen well developed on the short wave-length side. The intensity of the fluorescence was much less in this case, exposures of four and five minutes being necessary. In fig. *d* the wave-length

* Communicated by the Author.

of the exciting band has increased to such a degree that fluorescence no longer manifests itself. Keeping in mind the principles of the quantum theory, the question presents itself as to where the energy comes from that makes the anti-Stokes radiation possible.

In the case of sodium and iodine vapours there is no difficulty. The absorbing molecule may be in states of vibration and rotation higher than the zero states, and after excitation may revert to the zero state. In this case the excess energy necessary for the anti-Stokes term or terms was stored in the molecule before it absorbed the monochromatic exciting radiation.

Or when in the excited state, say the 27th vibrational level, it may, by collision with another molecule, either of the same or a different gas, be carried to a higher vibrational and rotational level, and thus, on its reversion to the lower initial state, release more energy than it absorbed.

Both of the above processes will be facilitated by high temperature, for in the case of the first process there is a greater chance of a molecule being initially in a state higher than zero, and in the second case the energy which can be delivered by the colliding molecule will be greater. High temperatures favour the development of anti-Stokes lines in the case of iodine vapour excited to fluorescence by the green mercury line, as was shown by Pringsheim.

We might therefore expect that heating a fluorescent solution would favour the production of anti-Stokes radiation.

To test this point the monochromator was set to deliver radiation as in the case of fig. *b* (Pl. V.), *i. e.*, to excite with a wave-length inside of the fluorescence band. A test-tube was filled with fluorescein solution at 0°, and the upper part heated to boiling with a bunsen flame. On holding the test-tube in front of the slit of the monochromator, and moving it up and down, the upper portion (at 100°) was seen to fluoresce with much greater intensity than the lower (at 0°). This was not the case with excitation by blue light. In general the effect of high temperature is to *decrease* the fluorescence of organic dyes. Some samples of rhodamine are non-fluorescent at 100° while shining brightly at room temperature.

There is another factor, however, which must be considered in this connexion. The absorption band advances towards the region of longer wave-lengths as the temperature is increased. This is a very general effect, and very obvious in the case of some coloured glasses. In the case of fluorescein the upper part of the solution (at 100°) is, by transmitted

light, of a slightly different tint from the lower (at 0°), the change of tint being from pale yellow to pale orange-yellow.

Interpreting this in the language employed in the case of iodine vapour, we might say that at the higher temperature the molecules were in a partially excited state, and that consequently less energy (as supplied by a radiation of longer wave-length) would be necessary to carry them to a definite upper level. Our knowledge regarding the absorbing mechanism in the case of these complicated molecules is too scant at the present time to warrant much speculation.

XXX. *The Measuring of Lags in Discharge.* By William Clarkson, *Ph.D., M.Sc., International Education Board Fellow, Physical Institute of the University of Utrecht* *.

1. *Introductory.*

WORK on lags in the occurrence of discharges through gases involves the determination of the dependence of the lag on various factors, of which, for example, voltage is one. Since fully to determine the relations sought numerous and comparable measurements must be made, quick and simple methods must be possible. They should also be utilizable at high voltages and be non-selective, recording all lags impartially. The present account describes two such methods used by the writer which fulfil the required conditions admirably.

2. "*Lags.*"

As a rule condenser, or "dynamic," discharges are studied, and indeed they present the most general case for this purpose. The sequence of events in the initiation of all dynamic discharges is the "striking" of the discharge (at some point on or beyond the threshold current characteristic), the subsequent "building-up" of the current with a traversal of the build-up region of the characteristic, till another point on the characteristic is reached and "extinction" occurs. Single condenser discharges exhibit these phenomena in the simplest form, and their study provides all the material essential for the elucidation of the problems involved.

* Communicated by Professor Ornstein.

Two types of lag must be distinguished, an interval between the application of the potential and the initiation of build-up, *i. e.*, a lag in "striking," and an interval between the discharge striking and the maximum current being attained—*i. e.*, a lag in "build-up." A lag in build-up is always present.

Since the voltage is a highly significant factor in lag variations it is necessary for their exact study that they be measured under definite or comparable voltage-time conditions. Normally the voltage throughout a lag in striking will be constant; its variation during the build-up period demands investigation.

It has been shown that during build-up of a condensed discharge the current increases continuously with time, very slowly at first, but subsequently at an ever-increasing rate, *i. e.*, in a somewhat exponential manner, until extinction takes place. In discharge-tubes the current, even after as much as 90–95 per cent. of build-up has transpired, is only some 10 μA. This means that for all but small condensers the voltage-fall in this period is almost negligible unless for very great lags, and that we commit but small (say at the most a 5 per cent.) error when we assume that the potential is constant, at its initial value, throughout build-up, and that then its fall to the extinction value is instantaneous.

3. *Principles of Methods.*

Two methods utilizing the foregoing properties of discharges have been developed. In each the quantity diverted by a system in parallel with the discharge-tube during the interval between the application of the condenser and the end of build-up being reached is measured.

With the applied potential being assumed constant (at V_M), this quantity is determined by :—

(A) The charging-up of a capacity K through a high resistance R, the increase in its voltage from V_0, the initial value, to V_K, the final value, being found. The time extinction t is given by

$$t = KR \log_e \frac{V_M - V_0}{V_M - V_K}; \quad . \quad . \quad . \quad . \quad (1)$$

(B) The throw of a ballistic galvanometer (throw ϕ) of known constant K, the deflexion θ for the steady current produced by V_M being found. In this case

$$t = K \frac{\phi}{\theta}. \quad . \quad . \quad . \quad . \quad . \quad . \quad . \quad (2)$$

Both arrangements satisfy the following essential conditions: the quantity diverted from the discharge system is so small that the conditions of discharge are unmodified; this can be checked by the fact that on no-discharge V_K attains the value of V_M, and that they can be made insensitive to all voltages less than the extinction voltage in value, otherwise the "clear-up" lag and the remaining charge in the condenser would add to the throw of the galvanometer, or increase the value of V_K.

4. *Electrostatic-Voltmeter Method.* (Fig. 1.)

Method.—The diagram is practically self-explanatory. A condenser C is connected to a source of steady voltage,

Fig. 1.

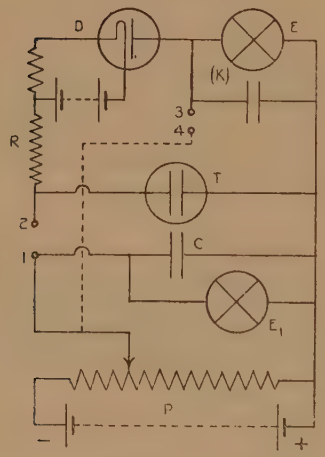

Fig. 2.

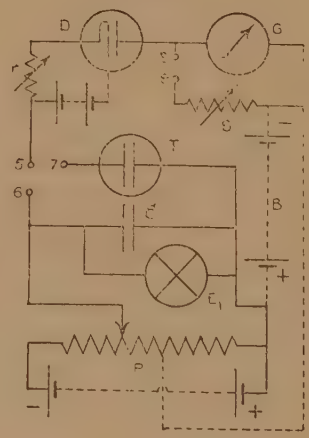

here diagrammatically a potentiometer P, and a voltage measuring device, here given as the voltmeter E_1. It can be discharged through the discharge-tube T by closing the key 2, 1.

An electrostatic voltmeter E, shunted with a small condenser, forming a system of capacity K, is connected in parallel with the tube through a diode D, as valve, and a high resistance R.

E_1 is initially at V_0, C at V_M. On closing 2, 1, C remains at V_M up to the end of build-up E, meanwhile charging up to V_K. The voltage of C then falls to its final value; E remains at V_K.

Precautions.—The following conditions must be observed :—

a. V_K must be higher than the extinction value. This can be obtained by choosing V_0 of suitable value. (To vary V_0 close 3, 4, adjust P.)

b. The diode resistance must be small compared with R and should be constant, that is, the filament current should be large and constant. In the writer's experience the correction for the valve resistance and characteristic could be neglected.

c. With R large and K small the quantities of electricity diverted from the discharge are negligible and the diode resistance relatively insignificant. The value of R should be the maximum consistent with K being great enough to be unaffected by the change of capacity of E on deflexion, and with V_K having a value such that the relation $V_M - V_0/V_M - V_K$ (see 1) is determined with sufficient accuracy. The writer has used circuits with R=10–50 megohms and $K = 0{\cdot}001\,\mu F$. For resistances even pencilled ebonite may be used ; some of the better grade "grid leaks," however, prove to be the most reliable.

d. The leakage of the system should be small. This is antagonistic to *c*. If it is constant, however, the rate of leak at V_K may be found and the correction applied for the interval between the discharge taking place and the reading of V_K, *i. e.*, for a period of the order of 5–10 secs.

5. *String-Electrometer Method.*

The foregoing arrangement has been found to possess two sources of error in practice—the resistance of the voltmeter contacts, an incurable fault in most cases, and the "soaking-in" effects of the condenser at K. Substituting a string-electrometer for the electrostatic voltmeter avoids these errors.

The string is coupled with the diode side and the plates connected through suitable batteries to the other arm of the circuit. The string can be made quite taut, as but little sensitivity is needed, and thus the system, though relatively sensitive, is practically dead-beat. The capacity and the leakage of the electrometer being quite negligible, K is the capacity of the condenser in parallel, *i. e.*, is constant, and as this may be a small air condenser, leakage effects may be eliminated and the soaking-in effects are quite avoided. Further, the value of R may be increased to almost any extent.

It was found that the new difficulties introduced were (*a*) determining the values of RC, and (*b*) measuring V_0 and V_K. For RC it was found easiest to calibrate the system directly with a contact of known duration; for (*b*) the electrometer was coupled through 3, 4 to the voltage supply, as shown. V_0 could be kept constant at a known value or determined afresh from E_1, and a few readings of V_K from E_1, while giving their values, also served to calibrate the instrument in this region. One advantage was that all voltages were read on the same instrument.

6. *Ballistic Galvanometer Method.* (Fig. 2.)

Method.—G is a ballistic galvanometer which can be shunted by a variable resistance S. One side is connected to the discharge-tube through a diode with variable filament current. In order to make the system insensitive to voltages less than the extinction value, the other terminal of the galvanometer was maintained at a higher potential than this by making its connexion through a battery B, as shown. Alternatively it may be connected permanently to a suitable point on the potentiometer.

With S out of the circuit (*i. e.* 8, 9 open) and the tube in (*i. e.* 5, 7 closed), a discharge is sent through T by momentarily closing 6, 5 and r adjusted until the diode conductivity is such that the throw ϕ of the galvanometer is of suitable value, *i. e.*, some few cms.; the smallest throw consistent with accuracy is best. The diode is now permitted to attain a constant state before final readings are made.

The tube T is now cut out of the circuit (5, 7 opened) and the shunt S included (8, 9 closed). S is now adjusted until the galvanometer deflexion on closing 6, 5 (*i. e.* for a voltage V_M) is of suitable proportions.

Knowing the values of the resistances of S and G, the values of the "throw" ϕ, and the deflexion θ, and the constant of the galvanometer system K, the duration of the discharge t may be found, as previously shown.

Precautions.—*a.* The more sensitive the galvanometer the less the charges diverted; the lower the resistance, however, the better. Extremes are unnecessary.

b The diode must be well insulated so that the back-voltage due to B produces no deflexion of the galvanometer.

c. It is easiest to determine the constant of the galvanometer directly by giving contacts of known duration. This gives the constant for working conditions.

d. Measurements of ϕ and θ must only be made with the diode in a quite constant state. This necessitates waiting some minutes after varying r. On the other hand, once the diode is constant a range of throws of from 2 or 3 to 50 cm. is possible, *i. e.*, a corresponding range of lag-values covered for the one filament current.

e. The method had one fault not contained in the preceding ones; on no-discharge or only a corona-discharge taking place the whole charge of C is thrown through the galvanometer. The effect has been found not to be serious; normally the probability of this occurring is absent in most cases. It is obviated in any case by making the contact at 6, 5 the minimum possible.

7. *Conclusion.*

Both the given methods fulfil the conditions for the study of lag phenomena. They are quick and reliable and normally give results under constant voltage conditions. They are accurate to the limit the dynamic characteristic allows, and if necessary may be corrected for the (say 5 per cent.) error this implies. Corrections, however, are superfluous; for one thing the readings are relatively correct, and in any case the lag under "constant" conditions shows greater variations.

Though for many purposes direct methods based on commutators, &c., or on the peak-voltage variations, are quite suitable, they determine only the extreme values of the lag and are not easily applicable to single discharges. The above methods record all lag variations impartially.

Further, by changing the minimum voltage to which the systems are sensitive the whole dynamic characteristic has been studied, the "clear-up" lag as well as the "build-up" lag. This is an interesting field.

The ballistic galvanometer method is suited to work at high voltages, the limit being fixed merely by the strength of the diode.

It is possible to combine both methods and to measure the quantity diverted into a condenser by the galvanometer throw. This method, however, is more complicated and has no obvious advantages.

The writer has great pleasure in recording his obligation to Professor Ornstein, and also to the International Education Board.

XXXI. *A Method of Determining the Absolute Zero of Temperature.* By J. R. Cotter, *M.A.**

THE determination of the absolute zero is, from the theoretical point of view, not an experiment in thermometry, but in accurate calorimetry. This is pointed out in Lord Kelvin's article "Heat," in the ninth edition of the Encyclopædia Britannica. In that article Kelvin suggests that the thermodynamic scale might be realized by means of what he calls a steam thermometer, that is, a vapour-pressure thermometer containing a mixture of water and steam. Using Clapeyron's equation for the calculation, he required to know the pressure of saturated steam at various temperatures, and the latent heat, as well as the density, of steam, and the ratio of the densities of steam and water. He believed that Regnault's values for the vapour-pressure and latent heat would be sufficiently accurate, but had no data for the density of steam. He was unable to form an opinion whether this method would be more accurate than the use of the hydrogen or nitrogen thermometer, but he expresses confidence that the steam thermometer, once standardized, would be much more accurate and more easily reproducible than any other thermometer whatever.

By a modification of Kelvin's method and the use of electrical calorimetry, the position of the absolute zero could, I believe, be found with a great degree of precision. In fig. 1, A is a small bulb which is connected to the much larger bulb B, and also to a small manometer M. The lower exit of B is connected to a tall mercury barometer capable of measuring a pressure of two or three atmospheres. A, B, and M are surrounded by a glass vessel, which can be exhausted. The whole apparatus is supposed to be enclosed in an accurate thermostat.

Now suppose that B is filled with mercury up to the mark C on the stem, and that A contains nothing but a liquid and its vapour, and that M contains the same liquid and its vapour in the closed limb. Water might be used, but probably a more volatile liquid such as benzene would be better. A naked heating-coil (not shown in the figure) is immersed in the liquid benzene in A. When all is at the temperature of the thermostat the benzene in the two limbs of M are at the same height. The vapour-pressure is then read off on the mercury barometer.

* Communicated by the Author.

To carry out an experiment the mercury is run out of B at a constant rate, the current in the heating-coil in A being simultaneously started. If the current-strength is properly adjusted to the flow of mercury the whole of the heat supplied by the coil will be employed in causing the mixture of benzene and its vapour to go through an isothermal expansion. Any lack of adjustment between the heat-supply and the change of volume will be at once revealed by the differential manometer M. When the mercury reaches the mark D the current is switched off and the outflow stopped simultaneously.

Fig. 1.

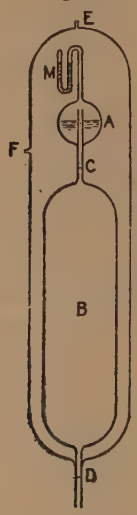

If v_1 is the volume of M and A down to the mark C, v_2 the volume of M, A, and B down to the mark D, Q the energy communicated in ergs, and T the (unknown) absolute temperature, then, exactly as in Clapeyron's equation,

$$\frac{dT}{T} = \frac{(v_2 - v_1)dp}{Q},$$

so that if a series of experiments is carried out at temperatures ranging from the freezing-point (T_0) to the boiling-point (T_{100}), we can find Q as a function of p and integrate equation (1), getting

$$\log_e \frac{T_{100}}{T_0} = (v_2 - v_1) \int \frac{dp}{Q}.$$

The advantages of this method are that only one volume, that of the bulb B from C to D, has to be measured; that the calorimetric conditions are ideal, since there is no radiation correction and no correction for the thermal capacity of the containing vessel; and that the heat-energy is directly obtained in ergs, so that Joule's equivalent is not required, as it would be in the method suggested by Kelvin. The only correction, beside the electrical ones, is that for the expansion of the globe B due to pressure and rise of temperature, and the usual barometer corrections.

In order to bring the mercury back from D to C it would be convenient to have a heating-coil wound round B. On warming B, and admitting air to the exhausted space, causing a cool current of air to pass in at E and out at F, the vapour in B would be dried, and the mercury could be slowly raised to C.

With this instrument the whole thermodynamic scale down to the lowest temperatures could be reconstructed by using a succession of suitable liquids. Some modification would be necessary below the freezing-point of mercury.

At present, the exact position of the absolute zero seems to be uncertain to about $0^{\circ}\cdot1$. Kamerlingh Onnes obtained the value $-273^{\circ}\cdot09$, while Henning and Heuse give $-273^{\circ}\cdot2$. Other calculations lie between these values.

XXXII. *Hamilton-Jacobi's Differential Equation in Dynamics.* *By* G. S. Mahajani *.

1. In his note, published in the January number of this Magazine, Kunz claims to have derived the Hamilton-Jacobi equation directly from Euler's differential equation of the calculus of variation. This note is somewhat misleading, for, instead of deriving the Hamilton-Jacobi equation, what is really done is simply to verify that a particular function is a solution of it.

2. That the equations of a dynamical system are included in the single principle of least action is well enough known. In fact, as has been sometimes said, the test of any system being "dynamical" is the existence of some function which remains stationary. And because "the Lorentz" field-equations can

* Communicated by E. Cunningham, M.A.

be derived from the least-action principle, some claim that "electron theory" is nothing but the dynamics of the electron. Hence, every dynamical equation—in particular, therefore, the Hamilton-Jacobi's equation—must be capable of being derived from the differential equation of calculus of variations.

3. The logical order of steps in this process is as follows :—

$$\delta \int_{t_0}^{t} \mathrm{L}(q, \dot{q}, t)\, dt = 0\,; \quad . \quad . \quad . \quad . \quad \text{(I.)}$$

from this we come to

$$\frac{d}{dt}\left(\frac{\partial \mathrm{L}}{\partial \dot{q}_r}\right) - \frac{\partial \mathrm{L}}{\partial q_r} = 0\,; \quad . \quad . \quad . \quad . \quad \text{(II.)}$$

$$r = (1, 2, 3 \ldots n)$$

and from this to

$$\left.\begin{aligned} \dot{q} &= \frac{\partial \mathrm{H}}{\partial p_r}, \\ -\dot{p} &= \frac{\partial \mathrm{H}}{\partial q_r}, \end{aligned}\right\} \quad . \quad . \quad . \quad . \quad . \quad . \quad \text{(III.)}$$

whence

$$\frac{\partial \mathrm{S}}{\partial t} + \mathrm{H}\left(q, \frac{\partial \mathrm{S}}{\partial q}, t\right) = 0. \quad . \quad . \quad . \quad . \quad \text{(IV.)}$$

Now all these four systems are completely equivalent to each other, and the significance of the last is this :—

If we can find *any* solution for S of that equation, with the necessary number of constants, say

$$\mathrm{S} = f(q_r, \alpha_r, t),$$

then the solution of the problem is

$$\left.\begin{aligned} p_r &= \frac{\partial f}{\partial q_r} \\ -\beta_r &= \frac{\partial f}{\partial \alpha_r} \end{aligned}\right\}$$

where "β's" are also constants.

It must be remembered the integration constants (α), and the other constants (β), do not in general bear a simple interpretation. But there is one particular solution of the equation in which the constants appear significant. That

particular function is what is known as the Principal Function of Hamilton, viz.:

$$S = \int_{t_0}^{t_1} L\,dt.$$

What Kunz has done is simply to show that this function satisfies the Hamilton equation. But that certainly does not establish that *any* solution of the equation solves the dynamical problem—which, in fact, is the main point about that equation.

4. Whittaker has shown in his book on Dynamics that "all the differential equations which arise from problems in the calculus of variations with one independent variable can be expressed in the Hamilton form" (Article 110). We can, therefore, dispense with the Lagrangian Equation and get the Hamiltonian system directly from the Euler equation of Calculus of Variations. And then we establish the complete equivalence of (III.) and (IV.) above.

5. I shall conclude by proving that the Principal Function of Hamilton, $\int_{t_0}^{t_1} L\,dt$, satisfies (IV.) in a way which clearly brings out the significance of the constants.

Consider the trajectory in the n-dimensional space :—

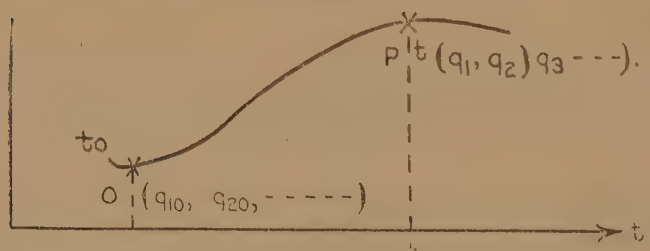

Let the system be projected from O with velocity

$$(\dot{q}_{10}, \dot{q}_{20}, \ldots \dot{q}_{n0}).$$

Then $\int_{t_0}^{t} L\,dt$ is a definite function of the $2n$ initial constants $(q_{r0}, \dot{q}_{r0})$ and t. Alternatively, we can express it in terms of

$$(q_{r0}, q_r, t),$$

and in this form we denote it by

$$S(q_{r0}, q_r, t) = \int_{t_0}^{t} L\,dt.$$

Consider, now, an adjacent *varied* path having one-to-one corresponding but *contemporaneous* positions of points. Then

$$\delta S = \int_{t_0}^{t} \delta L \, dt$$

$$= \int_{t_0}^{t} \left(\frac{\partial L}{\partial q_r} \delta q + \frac{\partial L}{\partial \dot{q}_r} \delta \dot{q}_r \right) dt,$$

which reduces to

$$\left[\delta q_r \frac{\partial L}{\partial \dot{q}_r} \right]_{t_0}^{t},$$

since

$$\frac{d}{dt}\left(\frac{\partial L}{\partial \dot{q}_r}\right) - \frac{\partial L}{\partial q_r} \equiv 0.$$

$$\delta S = \Sigma p_r \, \delta q_r - \Sigma p_{r0} \, \delta q_{r0},$$

$$\therefore \quad \begin{cases} \dfrac{\partial S}{\partial q_r} = p_r, \\[2ex] \dfrac{\partial S}{\partial q_{r0}} = -p_{r0}. \end{cases}$$

But, now, if we suppose t also to vary, we get

$$\frac{dS}{dt} = \frac{\partial S}{\partial t} + \Sigma \frac{\partial S}{\partial q_r} \dot{q}_r,$$

i. e.

$$L = \frac{\partial S}{\partial t} + \Sigma \frac{\partial S}{\partial q_r} \dot{q}_r$$

$$= \frac{\partial S}{\partial t} + \Sigma p_r \dot{q}_r.$$

$$\therefore \quad \frac{\partial S}{\partial t} + (\Sigma p_r \dot{q}_r - L) = 0,$$

i. e.

$$\frac{\partial S}{\partial t} + H = 0.$$

Thus we see that $\int_{t_0}^{t} L \, dt$ is *a* solution of the Hamilton-Jacobi equation, and that the constants (q_{r0}) define the initial position of the system, and (p_{r0}) give the initial momenta.

XXXIII. *The Application of a Valve Amplifier to the Measurement of X-ray and Photo-Electric Effects.* By C. E. Wynn-Williams, *M.Sc.**

IN a previous paper † a valve amplifier for ionization currents was described which could conveniently be used to replace an electrometer for the measurement of ionization currents of the order of 10^{-12} ampere. Such an instrument, it was shown, possessed certain advantages over other methods of measurement. Its usefulness, however, was limited in that it could not always be operated if an induction coil or similar impulsive high-potential apparatus was at work in its neighbourhood. For this reason, its use for the measurement of the ionization currents produced by X-rays was ruled out.

Subsequent investigations, however, have shown that, under certain conditions, and provided that suitable precautions are taken as to screening the apparatus, the difficulties in the way of using it for X-ray measurements can be overcome, and that, in addition, when employed in conjunction with a photo-electric cell, it can be used for photometric work. The object of the present paper is to explain how this can be done, for the guidance of any who desire to employ the amplifier either in connexion with X-ray measurements or photometric work.

In addition, the modifications of the amplifier described in the present paper may be found helpful in applications of the amplifier other than for X-ray measurements and photo-electric work.

For a full discussion of the theory of the amplifier the original paper ‡ should be consulted. Here, a general account will suffice. Referring to fig. 1, C and D are two three-electrode valves whose anodes are connected, through resistances R_1 and R_2, to H, the positive pole of the high-tension battery, the negative end of the latter being connected to A, the negative end of the valve filaments. A galvanometer G is connected across the two anodes. Considering only the plate currents i_1 and i_2, and regarding the system as a Wheatstone bridge, balance will be obtained when $R_1/R_2 = X_1/X_2$, where X_1 and X_2 are the impedances of

* Communicated by Prof. E. A. Owen, M.A., D.Sc.

† C. E. Wynn-Williams, Proc. Camb. Phil. Soc. xxiii. p. 811 (1927).

‡ *Loc. cit.*

the valves. The effect of driving an ionization current on to *one* of the grids—the other being left free, or "floating"—is to raise its potential, positively or negatively, and so alter the value of X_1 (or of X_2). This results in the bridge becoming unbalanced, and it can be shown that, provided the amplifier is operated with suitable values of high-tension and low-tension voltage, a small change E in the potential of

Fig. 1.

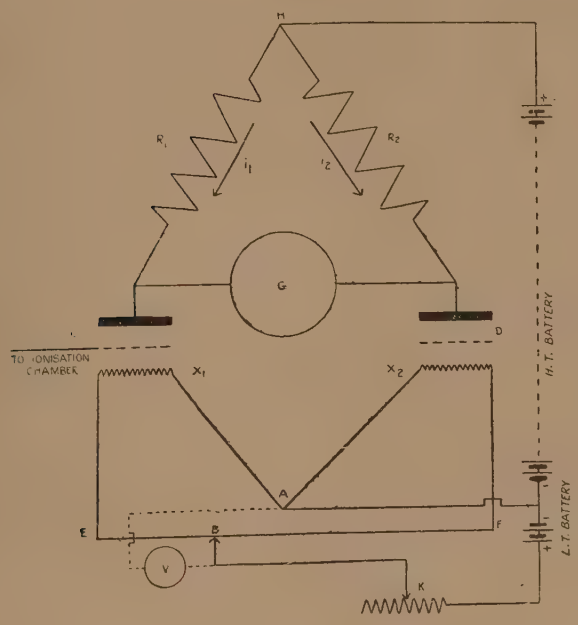

one of the grids will give rise to a galvanometer current of

$$E \times \frac{\mu}{2X + G\left(1 + \frac{X}{R}\right)}.$$

As the electrostatic capacity of, and leakage current from, the grid of a valve is usually very small, a small ionization current can raise the grid potential by an appreciable amount, and a current amplification factor—representing the ratio of the galvanometer current to the ionization current driven on to the grid—of the order of 10^5 can be obtained. The

amplifier may therefore be used to replace an electrometer, or extremely sensitive galvanometer, for certain types of work. To convey some idea of the sensitivity, while the characteristics of different valves of the same type vary considerably, in a particular case, using a reflecting galvanometer of sensitivity 200 mm./microamp., the system could be regarded as a quadrant electrometer of sensitivity about 6000 mm./volt and shunted by a leak of about 360 megohms. In this case the smallest current that could be measured (governed by the steadiness of the zero) was between 10^{-12} and 10^{-13} ampere. The scale was not strictly linear, but, if desired, could be calibrated without difficulty. For *small* positive ionization currents, however, the error introduced by assuming a linear scale could be ignored. A great advantage lay in the portability of the instrument, and also in the fact that high insulation of the ionization chamber was not necessary.

Compensation.—Unless two valves, identical in all respects, were used, such a bridge would be useless for the measurement of very small currents, owing to the fluctuations in potential of the batteries producing continuous and slightly different changes in the two plate currents and giving rise to a very unsteady zero. As the probability of obtaining a pair of valves—even of the same make and type—which are identical in every respect (*i. e.* as regards their various characteristic curves) to the degree required in the apparatus is extremely small, an artificial method of "matching" two ordinary valves has to be resorted to before a steady zero can be assured. Such a method was attained in the amplifier described in the original paper.

This can be accomplished very simply by the adjustment of the two series filament resistances FB and EB (fig. 1), which are actually the two portions of the slide wire EF. The theory, and the practical method of "compensating" the amplifier (or of rendering it immune from battery voltage fluctuations), are described in the original paper *. Here it is sufficient to say that, for any given filament voltage, there will usually be found one or more positions of the slider B on the wire at which a small change in the battery voltage produces no change in the galvanometer deflexion, and that it is a simple matter of trial and error to find a suitable combination of the position of the slider B and the filament voltage, the latter being adjusted by means of the rheostat K and the voltmeter V.

* *Loc. cit.*

Electromagnetic Disturbances.

Such a combination of amplifier and galvanometer can advantageously be substituted for an electrometer in certain types of work. In particular, it is very useful for radioactivity work. If, however, an induction coil be operated near it, or high-frequency surges are prevalent in the laboratory, the zero is rendered very unsteady by disturbances from these.

Each surge, or spark from an induction coil, radiates an electromagnetic wave, which induces an alternating potential on the insulated leads to either of the grids, resulting in the latter becoming charged alternatively positively and negatively. During the positive half-cycle, on account of the electron stream to the grid, the leakage current is greater than during the negative. Hence the grid acquires a mean negative charge during the "reception" of the disturbance, which leaks away after the wave-train has passed, behaving in this way like the "cumulative grid" rectifier used in radio-telegraphy or telephony.

In the original apparatus the valves and grid leads were enclosed in an earthed screening-box, which proved sufficient to protect the grid from hand-capacity effects. When, however, an induction coil was operated near the amplifier, the zero, in spite of the screen, was unsteady. In this case, as portions of the apparatus (*i. e.* batteries, resistances, etc.) were *outside* the box, the insulated leads entering the latter served to convey the potential surges through the electrostatic screen. Before the amplifier can therefore be used in a laboratory where high-frequency surges are prevalent, further attention must be paid to the screening.

Greater care is needed in screening a valve bridge than is the case when working with an ordinary electrometer, because of the rectifying action of the grid current. While, in the case of an electrometer, the high-frequency alternating surges *may* find their way to one pair of quadrants, despite the fact that most of the apparatus is enclosed in an earthed case, the mean value of the alternating potential will be zero, and will not cause any movement of the needle (unless, of course, the electrometer is being used idiostatically). On the other hand, in the case of high-frequency surges finding their way to the grid of a valve, the rectifying action of the grid current results in the mean value of the grid potential rising negatively and causing a change in the galvanometer current. Investigations were therefore made to ascertain whether, by careful screening, and ensuring that no wires

or leads remained outside the case, high-frequency surges from induction coils and transformers etc. could be sufficiently eliminated from the apparatus to render the zero steady enough for the measurement of X-ray ionization currents.

Arrangement of Apparatus.

In the original apparatus the anode resistances R_1 and R_2 consisted of plug-in resistance boxes of about 10,000 ohms. As it was necessary to enclose the anode resistances in the screening case, some form of variable resistance, controllable from outside the case, was desirable. An arrangement of this kind would also be more convenient from the point of view of rapid balancing, even were such screening unnecessary and the resistances left in the open.

As the change in resistance necessary to effect balance is small compared with the values of R_1 and R_2, only portions of the latter need be variable and controllable from outside the case. The remaining portions can consist of fixed resistances.

In the arrangement adopted, the anode resistances consisted of three parts:—(1) Two fixed non-inductive wire resistances of 10,000 ohms * each, tapped at 2500, 5000, and 7500 ohms, the 7500 tapping being used. (2) A series of fixed resistance coils, of about 200 ohms each, attached to contact studs—connexion being made to the latter by wiper arms—serving to obtain an approximate balance. (3) A continuously variable 400 ohm resistance, of the type supplied for use as potentiometers in wireless receivers, which enabled a fine balance to be obtained. (2) and (3) were adjusted from outside the box by means of ebonite extension rods. Metal rods could, of course, be used for this purpose, but unless earthed to the case *at the point of entry*, they might possibly serve to conduct high-frequency surges into the box. For this reason the writer favours ebonite or some insulator for use as an extension rod.

The circuit employed was as shown in fig. 2 (*a*). It will be observed that the stud switch has two wiper arms, A and B, to which are connected the ends C and D of the 400-ohm potentiometer, thus bridging any consecutive pair of 200-ohm coils. This forms an effective resistance of 200 ohms, having a variable tapping E connected to the positive pole of the high-tension battery. By rotating either the pair of wiper arms AB of the stud switch, or the slider E of the potentiometer, the bridge can therefore be balanced. The total

* As supplied by Messrs. Varley & R. I. for wireless work.

resistance of the coils F, G, H, K, ... should be a little greater than 1250 ohms. Eight coils of 200 ohms each should therefore be suitable.

A simpler arrargement is shown in fig. 2 (*b*), which has the advantage that only one wiper arm is required on the stud switch. In this case the resistance of the coils may be increased from 200 ohms to a little under 400 ohms each, their sum being just greater than 2500 ohms. Other arrangements could be devised, but the one shown in

Fig. 2.

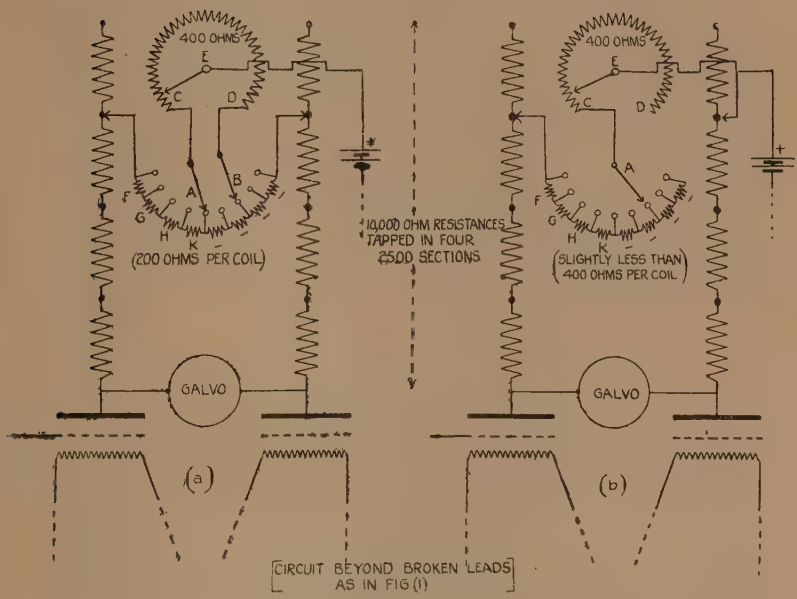

fig. 2 (*a*) will probably be found the most suitable. With the arrangement of fig. 2 (*a*), balance can be obtained in a few seconds with far less trouble than when plug-in resistance boxes are used. As a refinement, a smaller (say 10-ohm) resistance of a similar type to the potentiometer could be placed in series with the latter, to obtain a still finer control over the galvanometer, though this will not usually be found necessary.

It should be observed that it is not necessary to have the bridge actually balanced before use. Any arbitrary zero position of the galvanometer spot may be used. By slightly

debalancing, the zero can be moved to the most convenient position on the scale.

No other important changes were made in the circuit arrangements. The bridge was compensated as described on p. 817 of the original article, and used after a steady state of equilibrium was attained. The type of valve employed was, as in the original apparatus, "Osram 215," operated at a high-tension voltage of 60.

The valves, fixed and variable anode resistances, and leads to the grids were enclosed in one metal box, while the high- and low-tension accumulators, compensating slide-wire, and filament rheostat were enclosed in another. The connecting leads between the boxes passed through metal tubes soldered into the latter. The galvanometer—a reflecting pattern, fairly well damped, and of sensitivity about 200 mm./micro-amp.—was enclosed in a third box with a wire grid window, the leads from the galvanometer to the anodes passing, as before, through soldered-in metal tubes. The three boxes were close to one another, and were electrically bonded together in several places. All wires were completely enclosed in the boxes. The outer casing could be connected to earth, or left free, as desired. This was found to make no observable difference in the readings.

Practical Precautions.

The effect of substituting the valve bridge for the ordinary electrometer of an X-ray installation was investigated by connecting the collector of the ionization chamber, through its guard-tubes, to the grid of one of the valves. It was found, however, that the galvanometer zero was extremely unsteady whenever the induction coil supplying the X-ray tube was operated, regardless of whether the X-ray beam entered the ionization chamber or not. On disconnecting the lead from the grid, but leaving the apparatus in the same position relative to the coil and X-ray tube, the zero was found to be steady with the coil and tube in operation. This proves that here again the guard-tubes enclosing the leads to the ionization chamber, while providing sufficient electrostatic screening for ordinary electrometer work, were quite inadequate to prevent high-frequency surges from reaching the grid of the valve and causing unsteadiness.

To overcome this difficulty a simple ionization chamber was built into the side of the valve box, the high-tension electrode being connected to the positive pole of the 60-volt battery supplying the plate current of the valves, thus

dispensing with an extra battery and lead, while the collector was connected directly to the grid. An earthed metal tube with a copper gauze end window covered the whole chamber, leaving no wire or metal parts exposed that were not earthed to the case.

With this arrangement the zero was found to be unaffected by the operation of the coil and X-ray tube, while a large deflexion was obtained when a beam of X-rays entered the ionization chamber. If, however, the metal tube surrounding the chamber was not in perfect contact with the rest of the screening-box, the zero was very unsteady. Tin-foil had to be used to make a good joint, as soldering, while desirable, was not convenient with the particular arrangement used. This emphasizes the importance of ensuring that all metal parts of the screening-boxes etc. are in good contact with one another. For this reason the writer suggests that, rather than have the various parts of the apparatus in separate metal boxes, and the latter bonded together, it would be preferable, and more convenient, to enclose the whole—amplifier, batteries, galvanometer, and ionization chamber etc.—in one large metal case, and to direct the beam of X-rays into the chamber etc. through lead slits in the case.

Results obtained with X-rays.

To obtain some idea of the nature of the results to be expected, the following test was carried out. A Coolidge tube, operated by an induction coil, was so arranged as to direct a beam of X-rays into the ionization chamber. The intensity of the beam was adjusted to give a full-scale deflexion of the galvanometer. As the grid of the amplifier (and hence the collector of the ionization chamber) must not be earthed, the usual electrometer method of taking the zero reading by earthing the collector cannot be employed. Instead, to obtain a zero reading the X-ray beam must be cut off, either by means of a lead shutter or by cutting off the coil.

A series of aluminium plates of various thicknesses were then interposed between the tube and the ionization chamber, and, in each case, the ratio of the galvanometer deflexion with the aluminium in position, to the deflexion with the full beam entering the chamber, was measured. It was found that there was a slight unsteadiness in the deflexion, due to the fact that the output of the tube was not quite constant. This, however, was only of the order of 2 per

cent. A slight creep of the zero (mentioned in the original paper) was also observed, but did not seriously affect the results, and could be allowed for.

The logarithm of the observed ratio was plotted as a function of the thickness of the aluminium, giving an X-ray absorption curve for the metal (fig. 3). As the tube was operated much below its critical voltage for characteristic radiation, the resulting line shows a slight curvature, due to

Fig. 3.

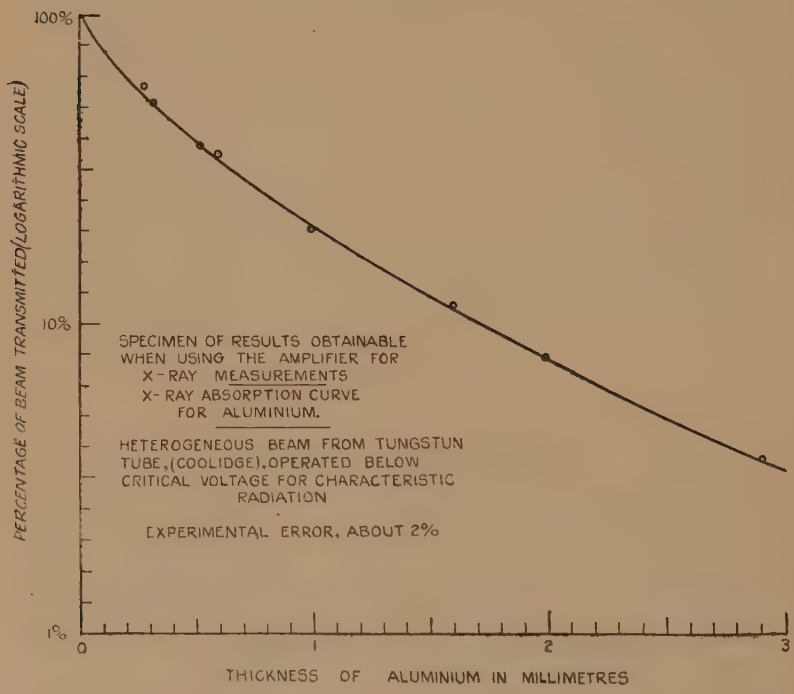

the beam being heterogeneous. The points, however, lie on a good line, especially considering that only one value was taken for each point and that the whole experiment did not occupy more than about twenty minutes. The scale was calibrated by a method described later, and found to be linear within the degree of accuracy obtainable in this experiment.

It is interesting to note that, if positive ionization currents are used (*i. e.* if the high-tension electrode of the chamber is

positive), the deflexions due to ionization currents, and those due to high-frequency surges picked up by the lead from the grid to the collector, are in opposite directions, a fact which is useful in deciding whether the amplifier is sufficiently well screened or not.

The effect of substituting a gas-tube supplied from the same coil for the Coolidge was next investigated. It was found that the output of the former was far too variable to give a steady deflexion, fluctuations of up to 100 per cent. being obtained. For work with such a tube some form of "integrating" indicator, such as an insulated electrometer etc., is evidently preferable to the valve bridge. The latter, however, might be useful for demonstrating the variation in the output of a gas-tube.

In the above tests, while the X-ray tube was close (about 2 feet) to the valve bridge, and in the open, the induction coil was several feet away. It is possible that, if the latter were situated near the amplifier, slight unsteadiness of the zero might be occasioned from the magnetic field of the coil, despite the most careful screening. Fortunately, however, in most X-ray installations it does not matter where the coil or transformer is situated, and it should not be difficult to arrange that it is several feet from the amplifier.

Photo-electric Effects.

Tests were carried out to ascertain whether the amplifier was suitable for measuring photo-electric currents. As a rough qualitative test, the apparatus and ionization chamber was set up as previously described, and a polished zinc plate attached to the collector of the chamber, the other electrode of the chamber being, as before, maintained at a potential of plus 60 volts by connexion to the high-tension battery supplying the anode currents. On allowing a beam of ultra-violet light from a mercury arc to enter the chamber, a large galvanometer deflexion was obtained, showing that the amplifier can be used to demonstrate the phenomenon of photoelectric emission.

For quantitative tests a potassium photo-electric cell was employed. The anode, or collector of the cell, was connected to one of the grids of the amplifier, and a suitable potential applied to the cathode from a separate battery, through a safety resistance. The cell was enclosed in a metal case, which was connected to the screening-case of the amplifier, and also to the guard-ring of the photo-electric cell. In this particular case the battery supplying the

potential to the photo-electric cell was outside the screening-case. If, however, trouble is experienced from high-frequency surges in the laboratory, it might be advisable to enclose it in the case also.

Light from a 60-watt metal filament lamp was admitted to the cell through a narrow slit in the outer screening-case. On gradually closing up the slit, by decreasing its length by means of a metal wedge placed across it and plotting the observed galvanometer deflexion as a function of the area of the slit remaining exposed, a curve was obtained which was practically a straight line, showing that the relation between the galvanometer deflexion and the current to the grid was approximately linear for small currents. This is the method of calibrating the scale referred to in the previous section.

Using this simple apparatus, it was possible to locate the positions of X-ray spectral lines on a photographic negative by moving the latter slowly across the slit and observing the galvanometer deflexion. This suggests that the amplifier, in conjunction with a comparatively low-sensitivity galvanometer, may be used with advantage to replace the electrometer, or high-sensitivity galvanometer, usually employed for photometer work in connexion with photo-electric cells. The advantages to be gained in such a case are: (1) high insulation of the leads etc. is unnecessary, (2) readings could probably be taken more quickly, and (3) the amplifier is much more portable and easier to set up than an electrometer.

It should be observed, however, that with such an arrangement, in taking zero readings, the grids (and hence the "collectors") must *not* be earthed. Instead, to obtain the zero reading the beam of light entering the cell should be cut off by means of a shutter, as described in the previous section in connexion with X-rays. It is also advisable, in choosing a galvanometer for the bridge, to see that it has a fairly high damping factor, as this will tend to mask any slight unsteadiness of the zero.

In conclusion, the writer desires to express his sincere thanks to Dr. E. A. Owen for offering facilities for carrying on this investigation at the Physics Laboratory of the University College of North Wales, Bangor, and also for the valuable suggestions made by him and his interest in the work. Further, he wishes to record his thanks to the various research students of the department for their assistance in carrying out tests of the amplifier with their X-ray and photo-electric apparatus.

XXXIV. *Notes on Active Nitrogen.* *By* Arthur Edward Ruark, *Ph.D., Mellon Institute of Industrial Research, University of Pittsburgh, and Gulf Oil Companies* *.

RECENTLY Okubo and Hamada † have published a paper on spectra excited by active nitrogen when it comes in contact with metallic vapours. Some of their results do not agree with those previously obtained by Ruark, Foote, Rudnick, and Chenault ‡, and it seems of interest to examine the causes of this discrepancy. Okubo and Hamada used a discharge-tube which they describe as being similar to those used by Strutt and Fowler § and by Mulliken ||. The pressure-range in which these tubes were operated is not stated, but it may be inferred that it was of the order of several tenths of a millimetre, since this is the pressure which ordinarily gives the brightest afterglow when the Geissler tube is used to produce active nitrogen. On the other hand, Ruark, Foote, Rudnick, and Chenault used an electrodeless ring-discharge in a pyrex sphere about 30 cm. in diameter, because this discharge can be run at much lower pressures, of the order of ·01 mm. (see p. 19 of our paper). Under these conditions, with a pressure ten to thirty times smaller than that which gives the best results in the ordinary discharge-tube, secondary effects are minimised. It is felt that this difference of pressure explains why we recorded fewer lines of thallium than Okubo and Hamada, and that it accounts, at least in part, for the fact that we obtained only the resonance line of cadmium at 3261 Å., and did not observe any spectral lines of sodium under the conditions described.

Because of possible secondary effects in the discharge used by Okubo and Hamada, such as collisions of the second kind between metal atoms and excited nitrogen molecules, it seems reasonable to say that their observation of the lines $2\,^3P-2\,^3P'$ of magnesium does not prove conclusively that two electrons can be displaced simultaneously to higher energy levels by the primary process which gives rise to metallic spectra at much lower pressures.

The writer and his colleagues recorded the mercury line $2\,^3P_1-6\,^3D_1$, which has an excitation potential of 10·0 volts. On the other hand, Okubo and Hamada state that they could

* Communicated by the Author.
† Phil. Mag. v. p. 372 (1928).
‡ J. O. S. A. & R. S. I. xiv. p. 17 (1927).
§ Proc. Roy. Soc. lxxxv. p. 377 (1911), and lxxxvi. p. 108 (1911).
|| Phys. Rev. xxxvi. p. 1 (1925), and previous papers.

not obtain any lines coming from levels higher than 4 D, with an excitation potential of 9·51 volts, even with exposures of 100 hours, although they were able to obtain the lines 2 P—4 D in four hours. It is probable that this discrepancy also is caused by the difference in pressure, although it is difficult to construct a detailed explanation in the present state of our knowledge.

The second positive bands of nitrogen were observed in some of our afterglow spectra. Okubo and Hamada have doubted our results, stating: "It may be questioned whether their sectored disks operated satisfactorily and perfectly cut out the direct discharge or not." This objection is invalid. Careful tests were always made to be sure that the sectored disks did cut out the direct discharge. It was easy to attain this condition since the disk was run slowly. Frequently it was so arranged that it made one revolution in five to ten seconds, and it was never run faster than one revolution per second.

Okubo and Hamada mention the existence of surface fluorescence of metals placed in the afterglow tube. This has been discussed by E. P. Lewis and others. The writer has observed a surface fluorescence of magnesium in active nitrogen as well as in mixtures of active nitrogen and helium. The distribution of the glow was not uniform, and it is believed to be associated with the presence of magnesium oxide or hydride on the surface. Small particles of magnesium in contact with active nitrogen glow with a bright white light. Presumably they become incandescent, although this cannot be stated with certainty.

Following Sponer, it is often assumed that active nitrogen owes its properties to the presence of neutral unexcited nitrogen atoms which combine in triple collisions with other molecules and atoms, exciting them by virtue of the heat of association which is transferred to them. Various theories may be advanced as to the subsequent history of the excited entities. It may be worth while to point out that a study of the absorption spectrum of activated nitrogen in the region where the absorption lines of the neutral nitrogen atom lie would provide evidence as to the presence of such atoms. The writer is not in a position to undertake such a test, and hopes this note will call it to the attention of someone equipped with suitable spectrographs.

It is a pleasure to thank Mr. Philip Rudnick for helpful comments.

Pittsburgh, Pa.,
May 8, 1928.

XXXV. *The Graphical Representation of the Stimulation of the Retina by Colours.* By FRANK ALLEN, *Ph.D., LL.D., Professor of Physics, and* A. J. FLEMING, *M.A., University of Manitoba, Winnipeg, Canada* *.

THE theory of colour vision formulated by Young is based upon the assumption of three fundamental colour sensations, red, green, and violet. Later exponents of this theory, such as Maxwell, Helmholtz, König, von Kries, McDougall, and Abney, have greatly expanded its scope, and applied it with more or less success to the explanation of the enormously varied phenomena of colour vision. All supporters of the trichromatic theory have agreed upon red and green as two of the primary sensations, but opinion has been divided between blue and violet as the third. The general principle of trichromasy is obviously not disturbed by such a change, though it is of course important to discover which of the two colours elicits the sensation in question.

Great and prolonged controversy has ensued on the number as well as the precise designation of the fundamental colour processes, and in particular many theorists have insisted upon the primary character of yellow and white. Indeed, some supporters of the three-components theory of Young, such as McDougall, and to some extent Abney, have felt the necessity of recognizing white as a fundamental sensation, largely because a greater or less amount of white is invariably associated with all colour perceptions.

If the judgment of consciousness alone is invoked, it would have to be admitted that the claims of yellow, blue, and white to equal recognition with red and green as primary sensations are well founded. These claims, however, are disturbed, if not refuted, by the experimental evidence that has accumulated. The yellow colour, for example, may be matched, except in saturation, by proper mixtures of spectral red and green lights. Experiment also has shown that spectral yellow will appear tinged with red or green according as the retina has previously been stimulated with green or red, respectively. As a sensation of yellow can also be obtained from the binocular mixture or fusion of red and green, it is clear that yellow cannot be a simple fundamental sensation. While Edridge-Green has presented a long series of reasons favouring the primary character of

* Communicated by the Authors.

yellow, more formidable evidence against that view has been collected by McDougall and by Parsons *.

In the case of white the evidence is also disturbing. White light may be dispersed into the spectral colours, and the colours may in turn be recombined to give white. Not only is this true for steady light, but it also occurs, as Newton originally showed †, in intermittent illumination by the spectral colours in succession, through the persistence of vision. Complementary colours also will give a white sensation devoid of any chromatic tinge. All colours, when excessively bright or very dim, approach whiteness in appearance. Flashes of white light may also give rise to chromatic effects of various hues.

In order to satisfy the claims of consciousness for the simple, and of experiment for the compound nature of yellow and white, some writers distinguish between psychological and physiological primaries. Both colours would therefore be recognized at once as psychologically simple and physiologically complex. Even should this distinction be admitted, the physiological complexity is of more fundamental importance and is far more, if not alone, susceptible of laboratory investigation.

To decide between blue and violet as the third primary involves different considerations from those affecting yellow and white. Young ‡ originally assumed blue to be the third sensation, but subsequently chose violet in its place. Burch believed his experiments indicated both colours to be primary sensations, thus making four. In his measurements to determine the sensation curves, Abney § used violet experimentally, and afterwards resolved this into red and blue components. The investigations of one of the writers ‖ have clearly shown the blue of the spectrum to be a compound sensation and violet to be simple. Reasons will shortly be given whereby the confusion may be satisfactorily elucidated.

Both Young and Helmholtz assumed that every colour stimulated the three primary sensations but in unequal amounts. The latter ¶ represented his assumption by the well-known diagram in fig. 1.

* 'Colour Vision,' 2nd ed. pp. 276 & 311.

† 'Opticks,' Second Ed. p. 122; also, Am. Journ. Physiol. Optics, vol. vii. p. 446 (1926).

‡ Parsons, *loc. cit.* p. 209.

§ 'Researches in Colour Vision,' pp. 230 & 240.

‖ Allen, Journ. Op. S. A. & R. S. I. vol. vii. p. 583 (1923).

¶ 'Physiological Optics,' English ed. vol. ii. p. 143.

Abney * dissented in part from this assumption. "The red," he says, "stimulates only the red sensation in one part of the spectrum, whilst the violet stimulates both the red and blue, and not the green sensations. A green colour not only stimulates the green sensation, but it stimulates the red and blue sensations as well, as is shown in Helmholtz's diagram." The experimental evidence adduced by Allen, however, clearly showed that stimulation with all colours from the extreme red to the extreme violet invariably influenced the three colour sensations.

Abney † represented his conclusions by a different type of diagram from that employed by Helmholtz. He used three parallel vertical lines to represent the primary sensations, and a horizontal line to represent equal stimulation of

Fig. 1.

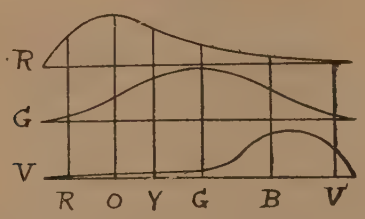

Helmholtz's represention of the colour sensations.

the three sensations to which, in conformity with his measurements, the white sensation is due.

A somewhat different graphical method has been used by the writers which seems to be very serviceable in representing the facts of colour perception.

In fig. 2 A, the action of red light upon the three sensations is shown by three unequal elevations, the highest representing the red, the next the green, and the lowest the violet sensation. The relative heights in this and the other diagrams, which represent relative degrees of excitation and not luminosities, are not drawn to any exact scale, though in many cases these could be obtained from the ordinates of the sensation curves of König, Exner, and Abney.

Thus from Abney's measurements of the "percentage composition of spectrum colours in terms of equal stimulus of sensations to form white," the exact scale of heights of the elevations can be found for the part of the spectrum for

* 'Researches in Colour Vision,' p. 231.
† *Ibid.* p. 232.

which his measurements are given in respect to the red, green, and blue colours. In his experiments Abney used the violet colour ·425 μ and afterwards reduced this to equivalent amounts of red and blue.

Fig. 2.

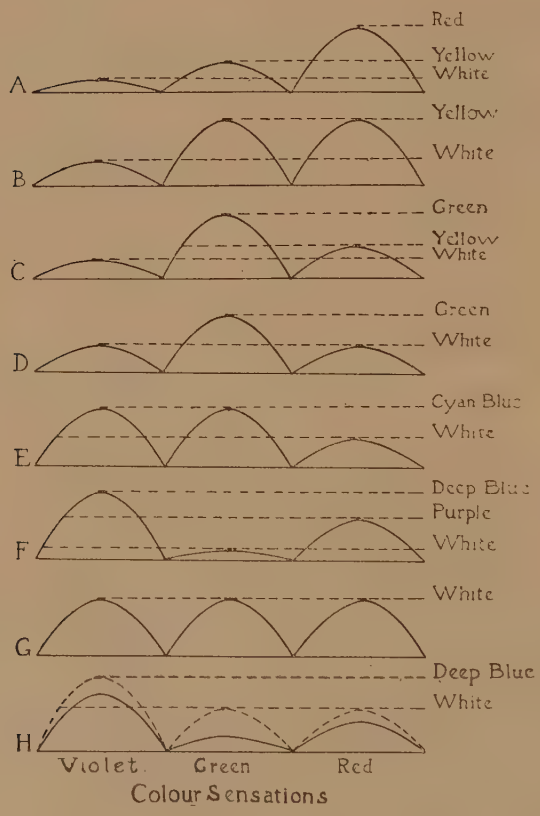

A few typical selections are quoted here from his 'Researches in Colour Vision' (p. 368):—

λ.	R'S.	G'S.	B'S.
·572μ	47·2	51·2	1·6
·527	29·7	62·1	8·2
·500	16·8	47·1	36·1
·477	5·7	14·1	80·2
·440	2·32	0·15	97·5

If now a horizontal line is drawn parallel to the base at a height equal to the lowest elevation, which in this case is violet, it will represent equal degrees of stimulation of the three sensations, which cause the white sensation associated with the red colour, by which the saturation is reduced. A similar horizontal line drawn at the height of the next highest elevation, the green, will represent equal amounts of stimulation of the red and green sensations, which will be perceived together as yellow. For according to the sensation curves the intersection of those for red and green occurs between the wave-lengths $\cdot 570\,\mu$ and $\cdot 580\,\mu$, which is the narrow yellow region of the spectrum. This means that equal stimulation of the red and green sensations is the cause of yellow. The remaining portion of the third elevation projecting above the yellow level represents the colour perceived as red.

Thus the perception of red rests upon a stratum of yellow and a substratum of white. The white diminishes the saturation, and the yellow confers on the red colour an orange tint. These recognized facts of colour vision, therefore, are fully represented by this diagram.

When the wave-length of the stimulus is shortened, the relative heights of the elevations are changed, both the violet and green being raised. The white and yellow levels will also be raised indicating the perception of a red colour with a diminishing saturation and an increasing orange tint. As the wave-length of the stimulating colour is made still shorter, a colour will be found which will excite equally both the red and green sensations. This may be represented by fig. 2 B, where there is no projecting part of an elevation above the yellow level. Yellow will therefore be perceived mingled only with the inevitable white.

After the yellow point of the spectrum is passed, the colours will stimulate the green sensation more than the red, as shown in fig. 2 C. As the red sensation is evoked more than the violet, a yellow line can still be drawn. Green, therefore, is perceived tinged with a yellow hue, mingled with the unsaturating white.

As the wave-length of the colour stimulus becomes shorter, its effect on the red sensation becomes less, while the violet is increasingly stimulated. A wave-length will therefore be found which will give equality of stimulation of the red and violet sensations, with a preponderance of green which is represented in fig. 2 D. The stimulation of the violet and red sensations will give a purple colour

which, when mixed with a proper amount of the complementary green, will appear white. Evidently, when this occurs green will be perceived mixed only with white. Abney found this to be the case with the wave-length ·515 μ.

Traversing the spectrum still farther towards the more refrangible end, a blue colour will be found that stimulates the green and violet sensations equally and the red to a smaller extent. This is shown in fig. 2 E, and represents the perception of the cyan blue of the spectrum.

With the violet colour the relative stimulation of the three sensations is somewhat altered. This is represented in fig. 2 F. In this case the red sensation is stimulated much more than the green and therefore a purple line can be drawn representing a stratum of this colour upon which the fundamental colour is superposed. As violet is the most saturated of all the colours *, the green elevation must be very low and in consequence the white line must be very close to the base. The excess of the real fundamental sensation represented by the part of the violet sensation above the purple level is not sufficiently powerful to do more than slightly alter the appearance of the purple.

Allusion has already been made to the difficulty of deciding whether blue or violet is the third primary sensation. From consideration of this graphical method of representation of the facts of colour vision, it occurred to the writers that the question could quite readily be settled in the satisfactory way of reconciling both points of view.

In the more refrangible half of the spectrum the colour changes from green to blue, then, at least in some eyes, to a much deeper blue or indigo, and finally to violet. It seems probable that if our sensations were only individually stimulated, the shortest visible wave-lengths would arouse only a sensation of still deeper blue instead of violet. These wave-lengths, however, possess the power of stimulating the red sensation as well as the deep blue, and hence we perceive a mixture of the two as the violet colour, which is represented in fig. 2 F. As additional evidence for this statement, the experiments of one of the writers † have shown that the wave-length ·410 μ is quite as powerful in enhancing the green and red sensations as yellow, which is fully seven hundred times as bright.

* Helmholtz, 'Physiological Optics,' Eng. ed. vol. ii. p. 127.
† Allen, Journ. Op. S. A. & R. S. I. vol. vii. p. 596 (1923).

Houstoun * quotes Prof. S. P. Thompson as saying that "indigo was more akin to green than to violet," and adds that "in this opinion, I think, everyone will concur."

In testing the vision of a number of observers Houstoun found four who saw indigo as a special colour; "they all objected to the word indigo, and chose dark blue as a more suitable name for the new colour; they all said it was more like blue than violet. They estimated the boundary between it and blue at 4650 A. U."

These considerations appear to justify the conclusion that the third fundamental colour sensation is excited by the shortest visible wave-lengths at the violet end of the spectrum, but that the deep fundamental blue which is evoked in normal eyes is masked by always being mingled with a considerable portion of the more luminous red.

In this connexion it is important to note, according to Helmholtz †, that when the part of the ultraviolet spectrum, extending from the line L to R (·3179 μ), is rendered visible it is indigo-blue with low, and bluish-grey with higher, intensities.

Should this reasoning be correct it would appear to follow that if the red sensation could be inhibited from action the violet colour would then be perceived as a deep or a very dark blue. Possibly this might be accomplished by experiments involving fatigue of the red sensation, or by intermittent stimulation at such a rate that only the blue sensation would have time to be excited. Indeed, one of the writers, Allen, recalls that when experimenting on the critical frequency of flicker of the violet colour, a brilliant flash of pure blue colour was sometimes visible for an instant as the sectored disk began to rotate, which quickly subsided into the normal violet hue. This phenomenon appears to be a combination of the pure blue sensation, excited before the red becomes active, with the five-fold "overshooting" or enhancement of its brightness that was shown to occur by Broca and Sulzer.

A readier method of testing this reasoning is afforded by the response of the colour blind to stimulation by violet. With this idea in view the recent book on 'Colour Blindness," by Dr. Mary Collins, was examined in the hope that observations covering this point had been made. This work contains the exceedingly detailed study of ten cases of colour blindness, concerning nine of which it is definitely stated that

* 'Light and Colour,' pp. 8 & 9.

† 'Physiological Optics,' Eng. ed. vol. ii. p. 66.

violet was always matched with or perceived as blue, while it is remarked that the tenth case confused these two colours when they were separately viewed. In addition, two cases of anomalous trichromatic vision were described, one of whom also matched violet with blue. It is noteworthy that on viewing colours this person's eyes almost immediately became strongly and even painfully fatigued. This conforms to the suggestion of Hollenberg * that colour blindness is partly due to the inhibition of the enhancing reflex nervous impulses, leaving the depressing impulses unopposed. It is significant also that all the colour-blind cases, with one exception, perceived violet as *dark* blue, which is what would occur should the much more luminous red sensation fail to be excited. The exceptional case matched violet with a fairly light blue.

So uniform and complete is the evidence from this book that the writers feel great confidence in concluding that the third primary sensation is a blue of a deeper and darker hue than any found in the spectrum, and that it is excited by the short violet waves between the wave-length $\cdot 425\,\mu$ and the end of the spectrum. In this manner, therefore, the rival claims of violet and blue as the third primary colour sensation may be reconciled.

It has been observed that when the intensity of the spectrum is very high, only two colours, yellow and blue, are seen, which at still higher intensities also disappear leaving the spectrum white in every part. These facts may be thus represented diagrammatically.

When the retina is stimulated by a certain range of colours from red to some wave-length of green, the colours incline towards yellow as the intensity of stimulation increases. This is due to a gradual approach towards equality of action of the stimulus upon the red and green sensations. If, for example, the colour is red, after the primary red sensation is excited to a certain degree, the green sensation is then stimulated disproportionately, with the result that the hue of the original red light becomes yellowish. The deep blue sensation would also be increasingly stimulated. The proportion of white and yellow in the resulting sensation would consequently be gradually increased. In the diagram this condition would be represented by increasing the heights of the violet and green elevations more rapidly than the red, and the white and yellow levels in fig. 2 A would pro-

* Journ. Op. S. A. & R. S. I. vol. ix. p. 389 (1924).

gressively be raised leaving the projecting part of the red continually smaller.

In the same way the part of the spectrum from some wave-length in the green to the violet would gradually be seen as blue of diminishing saturation. In other words, under intense stimulation the spectrum would gradually appear to be composed of but two colours, yellow and blue, the red, green, and violet having disappeared *. With still more intense stimulation the yellow and blue colours will also disappear leaving only white; that is, the heights of the three elevations in the diagram would become equal and the white level would rise to their summits as in fig. 2 G. When, on the other hand, the intensity of stimulation is greatly reduced, the yellow and blue colours first disappear leaving only the fundamental red, green, and violet. Ultimately these are equally stimulated, causing every colour to appear white. This effect may be represented diagrammatically by greatly reducing the heights of the elevations in fig. 2 G, so that the yellow and blue levels cannot be distinguished from the white with which they finally coincide.

The peculiarities of colour perception in the peripheral regions of the retina have called forth for their explanation the theory of zones, which is based upon the assumption that the fundamental colour sensations in the periphery differ from those in the centre. The analysis of colour perception is sufficiently involved already. To complicate it still further by different hypothetical mechanisms in different parts of the retina can be justified only when every other explanation of the facts has failed. Since nowhere on the periphery do new colours unknown to central vision appear, it seems most reasonable to conclude that it is not the fundamental sensations that differ from zone to zone, but their relative excitations by the same stimulus. In the centre, red, for example, stimulates the red sensation in excess of the green and deep blue or violet; in the so-called yellow-blue zone, red stimulates the green sensation equally with the red, just as it does in the centre with high intensities, and thus yellow and not red is perceived; in the extreme periphery the red stimulus excites the three sensations equally and causes a resultant sensation of white. Similarly with all other colours, except that the more refrangible portion of the spectrum excites the deep blue and green sensations equally, and finally all three.

* Rivers, in Shafer's 'Text Book of Physiology,' vol. ii. p. 1079.

This explanation of the differences between central and peripheral colour vision is confirmed by the existence of four colours*, whose hues remain invariable, except in saturation, in whatever part of the retina they are viewed. Since, for example, in the periphery a considerable range of wave-lengths will elicit the sensation of yellow, the very narrow band of wave-lengths in the spectrum that excite yellow in central, can scarcely fail to do the same in peripheral, vision.

Despite the fact that the theory of zones has received the support of a number of eminent investigators†, the present writers are unable to see wherein the facts of peripheral vision are irreconcilable with the principles of the trichromatic theory of Young.

The unequal boundaries of the retinal colour fields are simply the limits at which colours cease to stimulate one sensation in excess, and begin to stimulate two equally. Nor is there any reason to expect, on the trichromatic theory, that the limits of such actions of one wave-length will coincide with those of another. As the relative degrees of excitation of the three sensations by any stimulus vary with the intensity of the colour, it would follow that the boundaries of the colour-fields would not be the same for all brightnesses.

When two colours fall simultaneously upon the same retinal area, their effects may also be graphically represented. If, for example, the colours are properly selected hues of red and green, the graphical representation is a combination of figs. 2 A and 2 C, which will give equal heights of the red and green elevations and a higher violet elevation as well. The white level, consequently, will be raised denoting a less saturated yellow than the yellow of the spectrum with which the colour mixture may be matched in hue. It follows, therefore, that in order to obtain a complete match between the composite and spectral yellows, the latter must be mixed with white light. Since stimulation with two colours will doubly affect the three sensations there will always be associated with mixtures a larger proportion of white light than with individual hues. Colours formed by mixtures will in consequence always be paler than the spectral colours with which they otherwise match.

In order to obtain a sensation of white, the three primary sensations must be equally stimulated. Since a single

* Parsons, 'Colour Vision,' 2nd ed. p. 75.

† Helmholtz, 'Physiological Optics,' Eng. ed. vol. ii. p. 451.

colour cannot do this at moderate intensities, at least two colours must be chosen. From the diagrams it is evident that the two colours must be on the two sides of the green sensation. The complementary of red, for example, must be capable of raising the violet elevation to the same level as the others, and therefore it must have some blue in it; that is, the complementary of red must be a bluish green. If the hue of the colour of longer wave-length is changed to orange and yellow, the red and green elevations become more nearly equal in height, and in order to obtain an equal height of the violet elevation the wave-length of the second colour must become shorter, thus making the complementary a deeper blue.

It is apparent from the diagrams that green cannot have a single spectral complementary, since no spectral colour can raise the red and violet elevations to the level of the green. This can only be accomplished by a combination of red and blue or violet. The complementary of green is therefore purple.

Helmholtz has thus summarised * the general effects obtained in colour mixtures. "Lastly," he says, "there is still to be considered the effect of mixing colours that are not complementary. Concerning this matter the following rule may be given: When two simple colours are mixed that are not so far apart in the spectrum as complementary colours, the mixture matches one of the intermediate colours in hue; being more nearly white in proportion as the two components are farther apart, and more saturated the nearer they are together. On the other hand, the mixture of two colours that are farther apart than complementary colours, gives a purple hue or a match with some colour comprised between one of the given colours and that end of the spectrum. In this case the resultant hue is more saturated when the two components are farther apart in the spectrum, and paler when they are nearer together; provided, of course, that the interval between them always exceeds that of a pair of complementary colours.

"For instance, when red, whose complementary colour is greenish-blue, is mixed with green, the result is a pale yellow, which for different proportions of the two components may pass either through orange into red, or through greenish yellow into green. A mixture of orange and greenish yellow may also match pure yellow, but it is more

* 'Physiological Optics,' Eng. ed. vol. ii. p. 128.

saturated than that produced by red and green. On the other hand, by mixing red and cyan-blue, we get pink (pale purple-red); and by changing the proportions of the mixture we can make this pink pass into red, or through violet and indigo-blue into cyan-blue. But red mixed with indigo-blue or, better still, with violet gives a saturated purple-red.

"Incidentally, too, it appears that in these mixtures the degree of saturation of the colours of the spectrum is different. Thus red mixed with green of equal brightness gives a reddish orange; and violet mixed with green of equal brightness gives an indigo-blue close to the violet. On the other hand, when equally saturated colours of the same luminosity are mixed, the resultant compound colour is about midway between the two components.

"No new colours are obtained by mixing more than two simple or homogeneous colours. The number of different colours is exhausted by mixing pairs of simple colours . . . .

"Accordingly, with all possible combinations of systems of æther-waves of different frequencies of vibration, there is after all a comparatively small number of different states of stimulation of the organ of vision which can be recognized as different colour sensations."

These results can readily be inferred from the diagrams which have been considered. The three-fold nature of the response of the visual mechanism prohibits the experience of a saturated colour-sensation, except possibly, as McDougall has pointed out, by subjective vision in the case of after images *. With all colour mixtures the three primary sensations must be more evenly stimulated than with single colours, and hence the white level will be higher, or the saturation will be diminished. The farther apart in the spectrum the two component colours are, until they become complementary, the more nearly equal must be the stimulation of the three sensations, and in consequence the less the saturation. When the distance between the components becomes sufficient, equal stimulation of the sensations follows, the white level touches the tops of the elevations, and the distinctive hue of the mixture vanishes leaving only the white. When this complementary stage is passed the two outer sensations, red and violet, must be stimulated more than the green, if the components still recede from each other, with the result that the hue of the colour becomes a mixture of these two, which is purple. The intermediate

* Parsons, *loc. cit.* p. 122.

sensation, green, will be less and less excited as the components get farther apart, the white level will fall, and the resultant hue, as Helmholtz says, will appear more saturated.

The relative degrees of stimulation of the sensations must vary with the intensities of the components, and hence the specific results that Helmholtz gives in the second paragraph of the quotation can be fully accounted for and graphically represented.

The case mentioned by Helmholtz that violet mixed with green of equal brightness gives an indigo-blue close to violet, may be thus represented. The relative excitations of the three sensations by violet are shown by the continuous line in fig. 2 H. The violet, or rather the fundamental deep blue sensation, is stimulated most, the red next, and the green least. It will be recalled that Abney goes so far as to state that the green sensation is not at all excited by violet. The most *luminous* part of the violet colour is obviously the red component. Hence, if the green sensation be excited to the same degree as the red by the addition of green light, the effect of which is to bring the excitations up to the level of the dotted lines in the figure, the white level will touch the summits of the red and green elevations causing these hues to disappear, leaving only the real fundamental deep blue to be perceived, as Helmholtz observed, with a small admixture of white.

The sensitivity of the three primary sensations has been shown * to be under the control of the efferent nervous system through visual sensory reflex actions, which result from stimulation of the retina by all colours. By taking into account these induced changes in sensitivity many hitherto obscure phenomena of vision may be elucidated.

The most difficult problem in colour-vision has undoubtedly been the explanation of the mutual modification of colours by simultaneous contrast. The difficulty has been much increased by the discovery that binocular contrast exhibits the same modifications of colour as are found in uniocular observations. When two patches of colour fall upon contiguous retinal areas each appears as if it were mixed with nearly the complementary of the other. That is, if green and yellow are the two contrasting colours, the yellow appears as if it were mixed with red, which is one of

* Allen, "On Reflex Visual Sensations," Journ. Op. Soc. Am. vol. vii. p. 583 (1923); also *ibid.* vol. xiii. p. 383 (1926).

the components of the purple complementary of green, and green appears as if it were mixed with blue, which is the complementary of yellow. The two colours thus appear as if they were moved away from each other in the spectrum.

Helmholtz believed that the effect was an illusion due to systematic deception of the judgment. Hering considered that the assimilation of one retinal substance on one part of the retina under the influence, for example, of green light, caused or facilitated the opposite process of dissimilation of the same substance in the adjoining regions. No method was suggested by which these opposing processes could thus

Fig. 3.

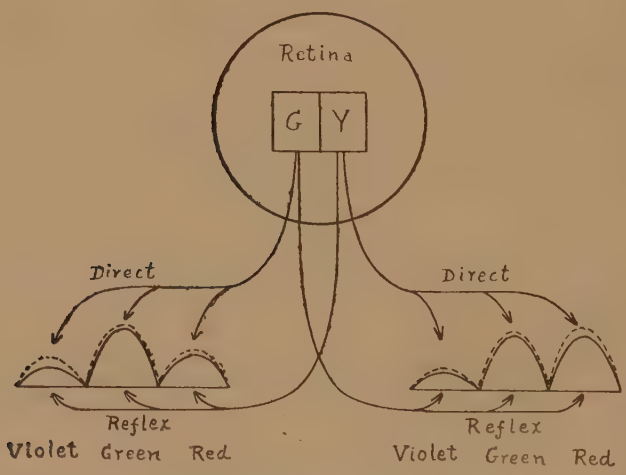

Uniocular Simultaneous Contrast.

be brought into action, while the phenomena of binocular contrast were ignored. The explanations provided by all other theories of colour-vision, of which over sixty have been devised, have been equally unsuccessful. The reflex theory of one of the writers affords a clear physiological explanation which rests not upon hypothesis but upon abundant experimental evidence *.

The application of the principle of reflex inductive action to the problem of contrast is easily indicated by the aid of

* Allen, "On Reflex Visual Sensations and Colour Contrast," Journ. Op. Soc. Am. vol. vii. p. 918 (1923).

the diagram in fig. 3. If two contiguous patches of green and yellow colours upon a neutral grey background be observed, a similar pattern will be formed upon the retina. The *direct* action of the green light stimulus upon the three fundamental sensations red, green, and violet is shown at the left of the diagram. Each primary sensation is stimulated to an amount represented by the relative heights of the elevations as shown by the continuous line. The efferent nervous impulses caused by the *reflex* inductive action of the adjoining yellow light are represented by the arrows acting *under* the elevations, by which their sensitivities are increased. Since experiments show that the visual reflex actions elicited by a colour act upon all, but predominantly upon its complementary, sensations, the violet and green sensations, which together make blue, which is the complementary of yellow, will be much enhanced in sensitivity. The direct action of the green light will thereby stimulate them more than is normally the case. The degree of stimulation of the enhanced sensations may be denoted by the dotted line in the diagram. Blue will therefore be added to the green, thus modifying that colour by mixing it apparently with the complementary of yellow.

Similarly, yellow directly stimulates the three sensations in the manner indicated by the continuous line at the right side of the diagram. The reflex action of green enhances predominantly the complementary red and blue (purple) sensations, of which red is visually the more prominent. The yellow colour therefore stimulates the red sensation more than normally, as indicated by the dotted line, thereby causing yellow to become orange in appearance.

Thus by contrast green appears bluer and yellow more orange than they will ordinarily appear ; or, in other words, they will assume the appearance of colours situated farther away from each other in the spectrum. As reflex inductive actions are not confined to one sensation but extend in varying degrees to all, the contrast modification will not be exactly, but only predominantly, the mixture of green and yellow with their complementaries.

As the reflex actions are transferred from one eye to the other with precisely the same effects, the explanation also holds for binocular contrast. In both cases the contrast effect will be seen as quickly as the ocular nervous mechanism can act.

XXXVI. *Photo-electric Thresholds of Potassium.* *By* Miss Jessie Butterworth, *B.Sc.**

UNFORTUNATELY, in plotting the graphs of log $\frac{C}{T^n}$ against $\frac{1}{T}$ and in computing the thresholds, in my recently-published paper †, centigrade temperatures were inadvertently used instead of absolute temperatures. The re-calculated thresholds are 7100 A.U. and 21,000 A.U., with a somewhat doubtful indication of a threshold at 10,000, A.U., and they are independent of the numerical value of n in log $\frac{C}{T^n}$; at any rate, in the range of values between $\frac{1}{2}$ and 2.

The experiments have recently been repeated with a tube which was lined with a thick silver film, formed by reduction of silver nitrate. The film was in contact with one of the electrodes, and the potassium was deposited on it. This form of apparatus made it possible to verify that any positive emission from the glowing platinum wire was too small to be detected by the galvanometer. The curve obtained by plotting log $\frac{C}{T^n}$ against $\frac{1}{T}$ was very similar to the earlier one, and yielded the values $\lambda = 9800$ A U. and $\lambda = 20{,}000$ A.U. The highest temperature reached was unfortunately too low to bring out the threshold, which probably exists at about 7100 A.U.

XXXVII. *The Power Relation of the Intensities of the Lines in the Optical Excitation of Mercury.* *By* R. W. Wood *and* E. Gaviola ‡.

IN previous work on the optical excitation of mercury by one of us §, it was observed that the line 3650 of mercury behaved in a quite anomalous way. Its relative intensity with regard to 3654 or 3663, for instance, could be varied over a large range by changing the conditions of the

* Communicated by Prof. William Wilson, F.R.S.
† Phil. Mag. [7] vi. p. 1, July 1928.
‡ Communicated by the Authors.
§ R. W. Wood, Phil. Mag., Oct. 1925, Sept. 1927.

excitation, but it was difficult to reproduce at will a given ratio of the intensities. It was found, for example, that the application of a magnetic field to the exciting lamp, to avoid reversal of the arc lines, increased the intensities of all of the lines of the optically-excited spectrum, but especially the line 3650. The increments of the lines due to the pressing of the arc discharge against the wall of the quartz tube by the magnet were :

Line 2537, four-fold; lines 3654, 3663, 5461, etc., eight-fold; line 3650, sixteen-fold *.

In the paper above referred to it was pointed out that the anomalous behaviour of 3650 was probably due to the fact that the line appears in fluorescence as the result of three successive absorption acts. Its intensity must then be proportional to the product of the intensities of the three exciting lines producing it, the absorption of which originates 3650. If the ratio of the intensities of the lines in the arc is constant, the product of the intensity of three arc lines is proportional to the cube of the arc intensity. 3650 should vary then with the cube of the intensity of the exciting light. On the other hand, nearly all of the other lines that appear in fluorescence are originated by two successive absorptions. Their intensity must then be proportional to the square of the intensity of the arc. And finally the intensity of the resonance line 2537 should vary directly with the intensity of the arc. This prediction has now been proved quantitatively in the course of the present work.

To observe the changes of the intensity of the different fluorescent lines as a function of the intensity of the arc exciting it, it was necessary to avoid the presence of foreign gases in the resonance tube, which have been found to influence the relative intensity of the lines. For that reason the measurements were made while the resonance tube was in communication with the pump, so that only mercury vapour at room temperature was present.

It was necessary to vary the intensity of the exciting light in a known amount, and in the same amount for all of the lines of the arc. Absorption filters cannot be placed between the arc and the tube because all filters absorb selectively.

One might vary the distance of the arc from the resonance tube, but in the case of a long narrow source of light in close proximity to the tube it is not easy to calculate the reduction accomplished in this way.

* R. W. Wood, Phil. Mag., Oct. 1925, p. 784.

The rotating sector cannot be used, as was pointed out in the earlier paper, since there is no actual reduction of the light-intensity, except as integrated over time. A fine-wire gauze, used as a filter, accomplishes the desired result, however, since it is non-selective in its action. We employed a sheet of gauze which reduced the intensity of the light to one-fifth of its original value. The gauze can be employed only under such conditions that the illumination produced behind it is uniform, *i. e.* not with a point-source, in which case the field would be bright, but traversed by dark lines (the shadows of the wires). If the gauze is placed between the resonance tube and the spectroscope, all lines will be reduced to one-fifth of their original intensity; if placed between the arc and the tube, lines varying as the square of

Fig. 1.

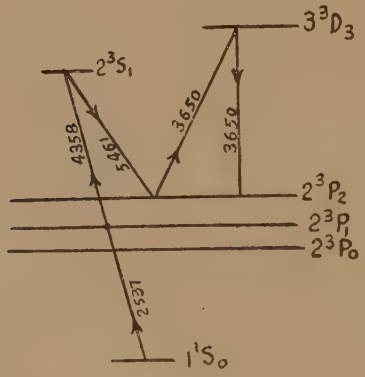

the intensity of the exciting light will be reduced to 1/25, and lines varying as the cube to 1/125 of their original value.

It was found that, if the gauze was held between the eye and the prism at the top of the resonance tube, the green fluorescence was still fairly bright (reduced to 1/5), while, if the gauze was held between the arc and the resonance tube, practically no fluorescence was to be seen (reduced to 1/25). When this method was applied with the spectrograph, we found, as was to be expected, that the lines 3650 and 3021 (three-stage absorption processes) were reduced to 1/125 of their initial value.

Method of Measuring and Results.

Fig. 1 shows the experimental arrangement. An image of the cross-section of the resonance tube was thrown upon

the slit of a large quartz spectrograph by an achromatic quartz fluorite lens of 43-cm. focal distance. A photograph of about 20 minutes' exposure was taken, while a fine copper gauze that reduced the intensity of the arc 5 to 6 times was placed between the arc and the tube. On the same plate a series of exposures of increasing duration was then taken while the wire gauze was removed. By matching the photographs of the same line on the plate, with and without gauze, and noticing the corresponding times of exposure, one could calculate the decrease due to the gauze for each line. The following table gives the results obtained by using different gauzes and in different positions. The first column gives the number of times that 3650 decreases if the gauzes are introduced. The third column gives the same for 3654, which was selected on account of its close proximity to 3650, but any other of the lines that appear, as a result of two successive absorptions, could have been used as well. The second and the fourth column give the cube root of the decrease of 3650 and the square root of the decrease of 3654 respectively. If 3650 changes with the third power of the arc intensity, and 3654 with the second power, the numbers in the second and fourth columns should be equal and express the change of intensity of the exciting light. We see that the agreement is quite satisfactory.

Change of 3650.	$\sqrt[3]{\text{Change}}$.	Change of 3654.	$\sqrt{\text{Change}}$.
150 times	5·3	30 times	5·5
1200 ,,	10·6	120 ,,	11·0
240 ,,	6·2	40 ,,	6·3
150 ,,	5·3	30 ,,	5·5
240 ,,	6·2	40 ,,	6·3
400 ,,	7·4	50 ,,	7·1
480 ,,	7·8	60 ,,	7·7

The second and fourth columns of the table give at the same time the decrease that one should expect for the resonance line 2537. We convinced ourselves that 2537 changed apparently with the first power of the arc intensity; but accurate measurements were not made, because that line is very easily absorbed in the air of the room if especial care is not taken in keeping it free from mercury vapour.

Summing up, we can say that the intensities of the lines that appear in fluorescence are proportional to the square of the arc intensity, with the exception of 3650 and 3021, that change with the third power, and of 2537 and 2656 (forbidden

line 2^3p_0–$1'S_0$), that increase with the first power of the exciting light.

We saw at the beginning that Wood had found that the application of a magnet to the arc increased 2537 four times, 3654 eight times, and 3650 sixteen times. It is now possible to explain those changes. The four-fold increase of 2537 shows that the reversal of that line in the arc has been reduced by the magnet so as to increase four times the intensity of the core of the line. Only the core of the line is absorbed by the vapour at room temperature. This increase of 2537 brings four times as many atoms to the level 2^3p_1. The line 3654 appears when no foreign gases are present, mainly as a result of the absorption of 3125. The fact that 3654 increases not only four times but eight shows that the intensity in the core of 3125 has been increased two times by the magnet. The same is true for 3650. The reversal of 3125 and 3650 in the arc without the magnetic field seems, then, to be about half as strong as the reversal of the resonance line 2537. This result is quite plausible.

XXXVIII. *A Suggested Method for extending Microscopic Resolution into the Ultra-Microscopic Region.* By E. H. Synge*.

It is generally accepted as an axiom of microscopy that the only way to extend resolving-power lies in the employment of light of smaller wave-lengths. Practical difficulties, however, rapidly accumulate as light of increasingly small wave-length is brought into service, and probably little hope is entertained of arriving at a resolution much beyond $\cdot 1\,\mu$, with, perhaps, $\cdot 05\,\mu$ as an extreme limit.

Yet a method offers itself which lies a little outside the beaten track of microscopic work and raises various technical problems of a new kind, but which makes the attainment of a resolution of $\cdot 01\,\mu$, and even beyond, dependent upon a technical accomplishment which does not seem impracticable at present. The idea of the method is exceedingly simple, and it has been suggested to me by a distinguished physicist that it would be of advantage to give it publicity, even though I was unable to develop it in more than an abstract way.

* Communicated by the Author.

I propose, therefore, to give a sketch of the method in principle, and will add something regarding the technical difficulties which seem to await the experimenter. Here, too, I only propose to deal with the principles involved in the various difficulties, and it must, of course, lie with the practical experimenter to say whether the suggestions I can offer really contain the solutions of the difficulties.

We shall suppose that a stained biological section, embedded in an ordinary medium, such as Canadian balsam, is attached to a microscope slide in the usual way, but not protected by any cover-glass. The exposed surface of this section is ground so that, over a small area, its divergence from a true plane does not anywhere exceed a fraction of 10^{-6} cm. The preparation of such a surface on the section is one of the technical difficulties which will be considered later

We shall suppose, also, that a minute aperture, whose diameter is approximately 10^{-6} cm., has been constructed in an opaque plate or film and that this is illuminated intensely from below, and is placed immediately beneath the exposed side of the biological section, so that the distance of the minute hole from the section is a fraction of 10^{-6} cm. The light from the hole, after passing through the section, is focussed through a microscope upon a photo-electric cell, whose current measures the light transmitted. The section is moved in its plane with increments of motion of 10^{-6} cm., so as to plot out an area, the intensity of the light-source being kept constant. The different opacities of the various elementary portions of the section, which pass in succession across the hole, produce correspondingly different currents in the cell. These are amplified and determine the intensity of another light-source, which builds up a picture of the section, as in telephotography, upon a moving photographic plate, the motion of the photographic plate being synchronized with that of the section. One would most simply plot out a square area of the section, with a side of, say, μ in length, by passing up and down in successive strips 10^{-6} cm. wide.

If it proved more convenient, the relative positions of the section and the plate containing the hole might be reversed, and the latter placed between the section and the objective of the microscope ; but, in any case, it is essential that the hole and the exposed surface of the section should be as close to one another as possible. In the arrangement first described the section is, of course, beneath the glass slide to which it is attached.

This description will sufficiently indicate the principle of

the method. It remains to consider the most obvious technical difficulties. These seem to be four in number :—

(1) The source of illumination, which must be of very great intensity.

(2) The making of small adjustments of order 10^{-7} cm., which would be required in the vertical inter-adjustments of the section and the opaque plate, and the making of regular increments of motion of 10^{-6} cm. in the plane of the section, the conditions in both cases being such that friction cannot be entirely eliminated.

(3) The planing of the biological section so that it presents a surface which does not diverge from a plane by more than a fraction of 10^{-6} cm.

(4) The construction, in an opaque plate or film, of a hole whose diameter is of the order 10^{-6} cm.

(1) *The source of illumination.*—An ordinary carbon arc might be strong enough to give indications with a hole of 10^{-6} cm. diameter. But to obtain a refined gradation of shades, such as would be necessary for satisfactory results, one would require a light of greater intensity. This points to the employment of an arc enclosed in a chamber under a very high pressure. The method has been used by Lummer, who is said to have attained a brightness nearly twenty times as great as an ordinary arc, using a pressure of twenty-two atmospheres. But the advantages of light produced in this way are greater than would appear from this figure. For the very high temperature will move the energy maximum of the spectrum down towards the blue, where the photo-electric effect of the light is greatest. I do not know whether the method has yet been brought to a practical stage. But it seems certain that one can count on it, as requiring only technical improvements, to be available for the method of microscopy suggested.

It is, of course, essential that the intensity of the light reaching the section shall be kept constant during the experiment, which might last two or three hours. Various automatic devices would secure this, and I need not consider the question here.

(2) *The making of very small adjustments.*—The impossibility of eliminating friction renders the use of springs impracticable, and the simplest arrangement which suggested itself to me was a differential screw having an exceedingly

small difference between the pitches of the two nuts. If the pitch of one nut were 1 mm. and of the other $\frac{1}{25}$ inch, the screw would advance ·016 mm. for each turn of the screw-head, and a worm and clicking spring arrangement, giving one click for each $\frac{1}{1600}$ of a rotation of the screw-head, would give increments of motion, of sufficient regularity, of 10^{-6} cm. each. I do not know whether the metric and inch units have ever been put together in this way, but I have been informed by a well-known firm of instrument makers that they could construct such a screw without difficulty.

For adjustments of the order of 10^{-7} cm., pitches of $\frac{1}{2}$ mm. and $\frac{1}{50}$ inch, or better $\frac{1}{51}$ inch, would probably be advisable. All parts of the instrument, where practicable, would be constructed of Invar, pieces being selected, if possible, with a zero coefficient of expansion.

(3) *The planing of the biological section.*—Plates of quartz glass can be ground, polished, and tested in pairs by means of interference fringes until the surface of each shows a divergence from a true plane of less than $\frac{1}{100}$ of a wave-length. Disks of 25 centimetres in diameter, of this degree of accuracy, were prepared by the U.S. Bureau of Standards in 1927. If ultra-violet light were used for the interference tests the practicable limit of accuracy would seem to be about 2×10^{-7} cm.

For obvious reasons, one could not apply such a method to produce a correspondingly plane surface on a biological section. But it seems possible to use plates of glass prepared in this way, which need not of course be as large as those mentioned, as the points of departure for a grinding device which should produce similar surfaces on a biological section embedded in any ordinary medium.

In principle the problem will be solved if we can construct a plate covered with emery grains, fixed in cement, in such a way that the summits of all the grains lie in the same plane, or do not rise above it by more than a fraction of 10^{-6} cm. in any case.

If we have such a plate and can move it in various directions in its plane, the emery grains will grind away any surface on which they impinge to a corresponding planarity. In fact, if we carry on the process for a long enough time, provided the emery grains do not break down, an even higher degree of planarity should be attainable in the section.

As regards the movement of the emery plate in the plane, it would probably be best that it should roll upon small

quartz spheres, which had themselves been ground and tested by interference fringes to a similar degree of accuracy —that is, to a fraction of 10^{-6} cm. The total inaccuracy might then be about 10^{-6} cm., but even so, if the process is carried on for long enough, a planarity to within a fraction of 10^{-6} cm. should be attainable in the section.

To prepare a grinding plate of this kind, it seems possible to make use of a glass plate which is accurately plane to within a fraction of 10^{-6} cm. If we take such a glass plate and, keeping it parallel to the base-plane of the emery plate, press it down very gently upon the emery particles before the cement hardens, their summits, if they do not pierce the glass, will lie in a plane to the required degree of accuracy. It would seem necessary to find a cement which does not alter its volume upon setting, and it might be advisable to use a plane plate constructed of a harder substance than glass, if it should be found difficult to avoid the emery particles piercing the glass. One would use only fine grains of emery, averaging, say, 5μ in diameter, and as it would only be necessary to grind away very small thicknesses of the comparatively soft material used in embedding the biological section, there should be little or no breaking-down of the emery points.

(4) *The construction of a hole of approximate diameter* 10^{-6} *cm.*—One finds holes in chemically deposited films of silver on glass, which approach this size, and these seem to indicate the way in which the problem may be dealt with. In the case of such films of silver the holes are presumably due to the presence, on the surface of the glass, of colloid particles of substances on which deposition of the silver does not take place. The extreme fragility of these silver films and the difficulty of cleaning them would, however, make them hardly suitable for the purposes in view, although it might be possible to use them.

When one turns to the question of employing films of more resistant metals "sputtered" in vacuum-tubes, it appears that minute holes do not here present themselves in the same way. The cathode particles, in fact, will not select their target, but will cover everything equally. We may suppose a number of colloid particles of some transparent substance, averaging 10^{-6} cm. in diameter, to be sprinkled on a plane glass slide, and that a film, about 10^{-6} cm. in thickness, of some metal with a high opacity, is then sputtered on the slide. Each of the transparent particles will be represented by a little monticle of the

metal, rising about 10^{-6} cm. above the general level of the film surface, and to obtain the holes which we require it will be necessary that we should plane down these little monticles. Here the method which has been proposed above for planing the biological sections seems to be again available. In fact, the differential screws should make it possible to approach the sputtered slide to the emery plate by stages of about 10^{-7} cm., and thus to plane down the monticles by successive thicknesses of similar amount. As we proceed in this way the larger of the transparent particles will be first exposed and these will provide us with holes whose advantages will depend upon the shapes of the particular particles. A particle which is pyramidal in form, or which consists of a congery of smaller particles forming a little pyramid, will obviously be the most suitable if the opacity of the film is sufficient.

The thickness of the film has been assumed to be 10^{-6} cm., and in the case of a metal as opaque as silver this should be just sufficient to allow of a hole 10^{-6} cm. in diameter being used. The light coming through a small area of the film around the hole will, of course, come to the same focus as the light which actually passes through the hole, and it will therefore be an advantage that the film should be sufficiently thick to make this accessory light of little consequence. Otherwise we should have to use a very high-power objective (so as to reduce this area), and this would have various inconveniences. If the film were 2×10^{-6} cm. thick we could disregard this accessory light to a large extent in the case of silver films. But in this case we should have to use larger transparent particles, and to obtain holes of diameter 10^{-6} cm. we should be dependent upon pyramidal particles. Since, however, some thousands, or even millions, of transparent particles might well be deposited on the slide initially, there would be no lack of holes to choose from, and if even a very small proportion of the particles or congeries were pyramidal, our requirements would be satisfied.

The final limitations of the method seem, indeed, to depend solely upon the limitations to the opacity of the films for light of various wave-lengths. For a film having the opacity of silver with respect to ordinary light, the practicable limit of resolution would seem to be about $\cdot 005\,\mu$, or $\cdot 004\,\mu$ where a pyramid occurred in the most favourable configuration.

Since this degree of resolution should bring all living organisms within our scope an attempt to overcome the technical difficulties would seem to be justified. It appears to me, indeed, that most of these difficulties are reducible to

the question of sufficient funds. The most formidable, apart from such considerations, might be the preparation of the plate of emery grains.

Note.—So much depends on the attainment of absolutely true surfaces that it seems worth suggesting a method for testing these, which would make a still higher degree of accuracy possible than by the use of interference fringes.

If total reflexion is taking place at a surface, and if another surface is brought sufficiently close to it (*i. e.*, a distance from it of the order of a wave-length), the reflexion ceases to be total, a sensible part of the light passing through the second surface. The intensity of this transmitted beam is derivable, in the case of grazing incidence, from the expression $e^{-4\pi\sqrt{\mu^2-1}\cdot\frac{y}{\lambda}}$, and since a change of intensity of one part in a thousand is measurable by photo-electric apparatus, a difference of less than 10^{-8} cm., or even 10^{-9} cm., in the distance between two parallel surfaces should be measurable, provided, of course, that they are sufficiently close together. An ordinary reflected beam would probably serve as well as one within the angle of total reflexion (although the formula would not be the same), and it would be much more convenient to work with. By making a constant beam of light travel systematically, at a constant angle, over the two plates, when placed parallel a fraction of a wave-length apart, a picture might be built up automatically in a few minutes, as in telephotography, the reflected beam affecting a photographic plate directly or through the medium of a photo-electric cell. The relative intensities of shade in this photograph would obviously indicate the relative distances apart of the plates, since different intensities in the reflected beam correspond to differences in these distances. If an apparatus for producing this kind of chart were perfected—and it seems to present no difficulties—the production of quartz plates and spheres to an accuracy of 10^{-7} cm. could be placed upon a commercial basis, and this should make the whole microscopic apparatus a practicable instrument of the laboratory as far as expense was concerned.

An adaptation of the first part of the idea in this note would also serve for estimating the distance of the section from the opaque plate, as they come very close together.

Dublin,
May 25, 1928.

XXXIX. *Notices respecting New Books.*

Lehrbuch der Physikalischen Chemie, von Dr. Karl Jellinek. *Fünf Bände. Erster Band: Grundprinzipien der Physikalischen Chemie. Die Lehre von Fluiden Aggregatzustand reiner Stoffe. Zweite, vollständig umgearbeitete Auflage.* [Pp. liii + 966, mit 162 Tabellen und 337 Textabbildungen.] (Stuttgart: Ferdinand Enke, 1928. Preis, geh. M.82; geb. M.86.)

THE first edition of this volume appeared in 1914, shortly before the outbreak of war. The complete work was planned in four volumes, but owing to the conditions resulting from the war it was not found possible to publish the last two volumes. The two volumes which were published have been out of print for some time and a new edition has become necessary. At the same time the whole work has been replanned and is to appear in five volumes; the extensive recent developments in atomic theory, theories of crystal structure, quantum theory, relativity, etc., having necessitated increasing the size of the work. Not only so, but judging by the size of the first volume, the size of the volumes themselves will be increased. The second edition of Vol. I. contains 234 pages more than the first volume. This is due in part to the rapid growth of the subject—the volume covers the literature up to the end of 1926—and in part to the transference of a certain amount of material dealing with the fluid state from Vol. II. to Vol. I., so that the whole of the material concerning the fluid state is now contained in the one volume.

The author's summary of the contents of this volume is as follows:—

> "Allgemeinste Gesetz des Stoffes und der Energie. Die Lehre vom fluiden Aggregatzustand reiner Stoffe (ganz verdünnte Gase, mässig verdünnte Gase, verdichtete Gase, Flüssigkeiten), experimentell, thermodynamisch und kinetisch behandelt."

Although it would not be possible to summarise the contents more briefly yet precisely, this description does not convey an idea of the comprehensiveness with which the work has been planned both from the theoretical and from the practical viewpoints. Mathematics is not avoided where necessary: for those who can appreciate it, it is there; those who cannot must accept the formulæ which are proved. Full descriptions of experimental methods and apparatus are given. References to the literature of the subject are included throughout, and detailed author and subject indexes amounting to 30 pages make it easy to obtain information on any particular point which is dealt with in the volume.

Because of its completeness and detailed treatment and in spite of—or perhaps also because of—its size, the volume is one which no physical chemist can afford not to have available for reference purposes.

The Higher Coal-Tar Hydrocarbons. By ARTHUR ERNEST EVEREST, D.Sc., Ph.D., F.I.C. Pp. xiii+334. (London: Longmans, Green & Co. 1927. Price 18*s.* net.)

THE importance of the derivatives of coal-tar hydrocarbons, as a source of synthetic colouring matters and because of the therapeutic value of some of them, has resulted in extensive investigations and an immense mass of literature. Most attention has been given to the derivatives of benzene, toluene, xylene, naphthaline, and anthracine. Comparatively little work has so far been done on the higher coal-tar hydrocarbons, and they offer a wide field for careful systematic research. The volume under review is concerned very largely with three groups of the higher hydrocarbons, the acenaphthene group, the fluorene group, and the phenanthrene group. These groups have not up to the present yielded many derivatives which are of commercial importance as a source of colours and intermediates. The aim of the author has been to collate the known facts concerning these groups in the hope that the many virgin fields for research which they offer may stimulate systematic work in them.

Spectroscopy. By E. C. C. BALY, C.B.E., M.Sc., F.R.S. Third Edition. (In four volumes.) Vol. III. [Pp. viii+532, with 6 plates and 60 figures.] (London: Longmans, Green & Co., 1927. Price 22*s.* 6*d.* net.)

THE third of the four volumes into which the third edition of Prof. Baly's text-book on spectroscopy is divided is concerned mainly with those developments of the subject which are the more immediate results of Bohr's theory. The size of the volume is a testimony to the remarkable developments in spectroscopy within recent years. Spectroscopists, both practical and theoretical, are under a debt of gratitude to Prof. Baly for the detailed descriptions of experimental work and the numerous tables of experimental results which are given in the volume. But although the practical aspect of the subject predominates, the principal advances in atomic theory are adequately described.

The volume is divided into four chapters of which the first, on series of lines in spectra, fills more than half the total number of pages. It contains an account of the early work of Rydberg, Kayser and Runge, Paschen and Ritz, of Bohr's theory and of the subsequent developments, leading up to modern work on series, the selection principle, doublets and multiples, etc. A summary of results connected with X-ray spectra is also included. The second and third chapters are devoted to the Zeeman and Stark effects respectively, which are discussed both from the theoretical and practical viewpoints: the anomalous Zeeman effect, Landé's rule of intensities, and the Paschen-Back effect are amongst the subjects dealt with. The fourth and final chapter contains an account of work on emission band spectra.

References to original publications and complete author and subject indexes increase the value of the volume.

A Treatise on the Analytical Dynamics of Particles and Rigid Bodies with an Introduction to the Problem of Three Bodies. By Professor E. T. Whittaker, LL.D., Sc.D., F.R.S. Third Edition. [Pp. xiv.+456.] (Cambridge: at the University Press, 1927. Price 25*s.* net.)

The new edition of Prof. Whittaker's Treatise on the Analytical Dynamics of Particles and Rigid Bodies is, with the exception of the last two chapters, a reprint of the previous edition, with some corrections and additional references. The two chapters in which changes have been made are those dealing with the general theory of orbits and with integration by series. In view of the developments of this portion of the subject during the ten years which have elapsed since the publication of the second edition, these two chapters have been entirely rewritten and the new matter incorporated. The additions enhance the value of the treatise, which has proved invaluable to the more advanced students of theoretical dynamics during the past generation.

The Electrical Conductivity of the Atmosphere and its Causes. By Victor F. Hess, Ph.D. Translated from the German by L. W. Codd, M.A. Pp. xviii+204 with 15 figures. (London: Constable & Co. 1928. Price 12*s.* net.)

A concise but adequate account is given in this volume of the present state of knowledge of the ionization of the atmosphere and its causes. The apparatus and methods for determining the conductivity of the atmosphere, the average mobility of the ions, and the number of ions are described. The various phenomena which contribute to the observed ionization, both those of radioactive origin and those of non-radioactive origin, are considered in some detail. The processes which result in the destruction of ions are then dealt with. The question of how far the known causes of ionization are quantitatively sufficient to bring about the amount of ionization actually observed is then discussed for the layers of air near the earth over dry land, for the lower layers over the sea, and for the free atmosphere up to the neighbourhood of the upper limits of the troposphere. It follows from this discussion that the observed ionization is in all cases satisfactorily accounted for by the known causes of ionization. Finally, a section is devoted to the phenomena of the conductivity and ionization of the upper layers of the atmosphere.

A detailed account is given of the penetrating radiation (höhenstrahlung), including the original work up to the beginning of 1927. For the present translation, the sections dealing with this and with the phenomena in the highest layers of the atmosphere have been rewritten by the author and brought up to date.

The subject of the volume is of interest to those concerned with geophysics, meteorology, astronomy, geology, and radiotelegraphy. To all of these the present account will prove a valuable summary. References are given to the more important theoretical investigations and experimental results.

X-Rays: Past and Present. By V. E. PULLIN and W. J. WILTSHIRE. 229 pp., with 43 illustrations. (London: Ernest Benn. 1927. Price 12*s.* 6*d.* net.)

IN the thirty years or so which have elapsed since their discovery, X-rays have exercised a very profound effect on physical and chemical investigation and have found many practical applications in medicine and surgery and in various branches of industry. They have always been of great interest to the general public, and the telling of their story in a manner that would interest the inquiring layman who is not possessed of any scientific training was well worth doing. This is a task which the authors, both radiologists with wide experience, have accomplished with conspicuous success.

After an account of early experiments, the researches of Crookes and others with the electric discharge tube are described, leading to an account of Röntgen's discovery. The early controversies as to the nature of X-rays are recounted, and the investigations of J. J. Thomson and others which led to the discovery of the electron are summarised. The development of modern ideas as to the nature and structure of the atom which has resulted from these and other investigations is explained in non-technical language. The phenomenon of the diffraction of X-rays by crystals, which finally settled the vexed question as to the nature of the rays, is then discussed. The remainder of the book deals with the numerous practical applications of X-rays and with the modern developments of X-ray tubes and apparatus.

This well-written account will bring home to the layman the important results which may accrue from research in pure science and will leave him with the conviction that there are many avenues as yet unexplored in which X-rays will be found to have practical application.

The Theory of Functions of a Real Variable and the Theory of Fourier's Series. By E. W. HOBSON, Sc.D., LL.D., F.R.S. Vol. I. Third Edition. Pp. xv+736. (Cambridge: At the University Press. 1927. Price 45*s.* net.)

THE second edition of Prof. Hobson's treatise on the theory of functions of a real variable was double the size of the first edition, which appeared as a single volume in 1907, and was substantially a new book. Volume I. of the second edition appeared in 1921, Volume II. in 1926. The first volume has now gone into a third edition. The previous edition has been thoroughly revised, certain sections rewritten, and new matter, amounting in all to 65 pages, has been added. These additions have been made without changing the numbering of the sections, so that the references in Volume II. to sections in Volume I. are still applicable to the new edition.

The work as a whole is too well known to call for detailed comment. The present volume deals with numbers, the descriptive and metric properties of sets of points, transfinite

numbers and order types, functions of a real variable, the Riemann integral (in which the section on the Riemann-Stelltzes integral has been rewritten and enlarged), the Lebesque integral (in which the sections dealing with the indefinite integral of a function of two variables have been considerably added to), and non-absolutely convergent integrals.

Prof. Hobson's treatise is the standard treatise on the subject in the English language, and he is to be congratulated upon the revisions and additions which are incorporated as new editions become necessary, so keeping the work thoroughly up to date. A list of additions and corrections to the second edition (1926) of Volume II. is given at the end.

The printing of the volume is in accordance with the highest traditions of the Cambridge University Press. The price of the new edition remains the same as that of the second edition.

Chemical Affinity. By L. J. Hudleston, M.C., B.Sc., A.I.C. [Pp. vii+138.] (London: Longmans, Green & Co., 1928. Price 7*s.* 6*d.* net.)

This new volume in Messrs. Longmans, Green & Co.'s series of Monographs on Inorganic and Physical Chemistry deals with the important subject of the application of thermodynamic considerations to questions of chemical affinity. The treatment is elementary and assumes no previous knowledge on the part of the reader: it is therefore suitable as an introduction to the subject and to the study of more advanced treatises.

After preliminary considerations about energy, its conservation, degradation, and availability and about reversible and irreversible processes, the conception of entropy is introduced and explained. The importance of the heat content and free energy (following the terminology of Lewis) is then introduced and the measurement of free energy changes is discussed. The next chapter is devoted to reactions involving solutions, the important conception of "activity" introduced by Lewis being explained. In the following chapter, Nernst's heat theorem and various applications are dealt with. The final chapter contains a large number of illustrations of the application of the principles explained in the preceding chapters to practical problems. The author states that it is in this chapter "that the main purpose lies, and if this serves to assist research workers to learn how to survey their problems, to estimate the most favourable conditions for experiment, and to study the possibility of disturbance by side reactions, this purpose will, indeed, have been fulfilled." There are many to whom mathematical symbols have little meaning until translated into numerical data: all such will be grateful to the author for the variety of practical applications discussed in this chapter.

The volume is well written and clearly expressed, and the author has been judicious in his choice between what to include and what to exclude. The volume is well printed and the type is very clear.

Cambridge Tracts in Mathematics and Mathematical Physics:—

No. 23. *Operational Methods in Mathematical Physics.* By HAROLD JEFFREYS, M.A., D.Sc., F.R.S. [Pp. vii+101.]

No. 24. *Invariants of Quadratic Differential Forms.* By OSCAR VEBLEN, Professor of Mathematics, Princeton University. [Pp. viii+102.]

(Cambridge: at the University Press, 1927. Price 6*s.* 6*d.* net each volume.)

THE two new volumes of the series of Tracts in Mathematics and Mathematical Physics, published by the Cambridge University Press, are welcome additions to a valuable series.

No elementary connected account of Heaviside's powerful operational methods for solving differential equations in physics has hitherto been available. Dr. Bromwich and several other investigators have published papers dealing with Heaviside's methods and some of the applications, but the fact that more general use has not been made of them is due undoubtedly to the lack of a connected summary such as Dr. Jeffreys has now provided. The principles of the methods are briefly and simply explained, and the manner of applying them to practical problems is illustrated by a wide variety of applications—to electrical and other problems involving one independent variable, to wave-motion, to conduction of heat, to problems with spherical or cylindrical symmetry, to dispersion, and to problems involving Bessel functions. These illustrations bring home to the reader in a compelling manner the power of the method and its peculiar utility for physical problems in which the initial conditions are assigned.

The Tract by Professor Veblen bears the same title as No. 9 in the series by the late J. E. Wright, which has for some time been out of print. The earlier tract was published in 1908, before the development of the generalised relativity attracted widespread attention to the subject. The new orientation thereby given to the subject has to a large extent shaped the contents of this tract: practical applications to relativity, electromagnetic theory, dynamics, and the quantum theory have been omitted. Such are easily accessible to the student of physics. What he requires and what he is provided with in this tract is an account of the underlying differential invariant theory but oriented with a view to practical applications. The treatment has been made as elementary as the subject permits, and fundamental definitions have been carefully formulated.

[*The Editors do not hold themselves responsible for the views expressed by their correspondents.*]

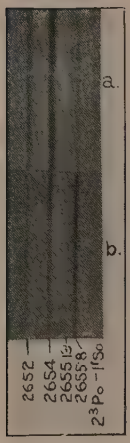
2652
2654
2655.12
2655.8
$2^3P_0 - 1^1S_0$
b.
a.

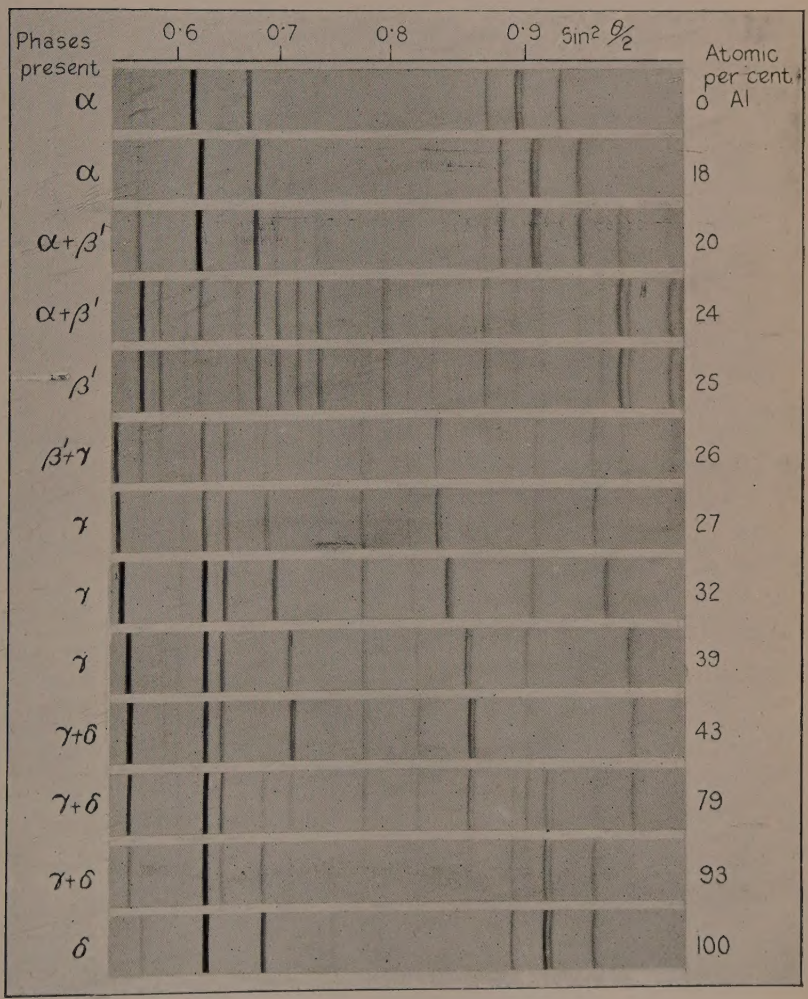

Powder Photograms of Silver-Aluminium Alloys. Fe–K-Radiation.

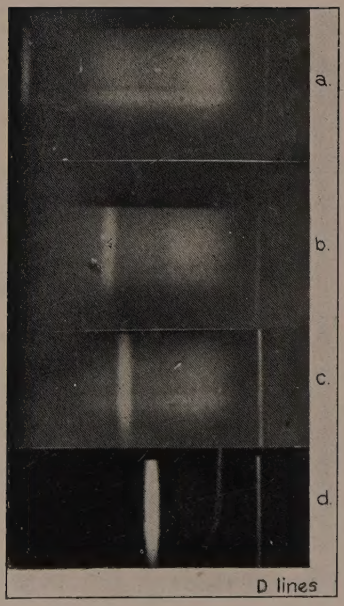

Anti-Stokes Radiation.